Company Profile:

Sunkye International Co., Limited.(Connector) Business Group, with sixty five years of experience, specializes in designing and producing connectors, related components and cables. A wide range of connector products, twist pin connector, optical fiber connector, RF coaxial connector, separable connector, custom and application-

Company profile

specific connector, etc, which are widely used in military area: aerospace, aviation, electrical, ship-building, defense system, etc and civil area: communication, telecom, automotive, rail, etc.

Design team focuses on meeting customers´ requirement with continuous innovative technology, manufacture team provides high quality products by utilizing advanced equipments in standardized processes to ensure customers´ benefits.

Sunkye is ISO 9001 certified, UL, VDE, CE certification passed, and ensures products quality by testing in realistic conditions with advanced test facilities, professional test employees.

Sunkye team is committed to offering high quality products, best service, prompt delivery and competitive price for you.

Manufacture Equipment:

Five-Axis CNC, AGIE EDM, SODICK WEDM-LS, 40G Vector Network Analyzers, Vacuum Heat Treatment Equipment, Glass-sintered System, Laser Processing Center, High Velocity Ram Machine, Gold, Nickel and Cadmium Plating Production Line, Thermosetting Injection Machine, Thermoplastic Injection Machine, Swiss Automatic Lathe, etc.

Test Facilities:

Comprehensive Test Instrument of Temperature, Humidity and Vibration; Experimental Box of Temperature and Shock; layer thickness meter; Coordinate Measurement Machine, etc.

SUNKYE

www.sunkye.com

MIL-DTL-83513 Micro-D Connectors

SUNKYE

CONTENT

MIL-DTL-83513 Micro-D Connectors

R04J Series Crimping Connectors 1
R04J Series Straight to PCB Connectors.....19
R04J Series Right Angle to PCB Connectors.....31
R04J Series Solder Cup Connectors.....46

MIL-DTL-83513 Micro-D Connectors

R04J Series Crimping Connectors

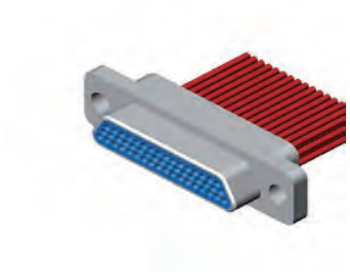

Brief Introduction

- Micro-D Connectors
- Twist Pin Contacts, High Density
- Metal Shell, Nickel or Cadmium Plating
- Crimping Connectors
- The Sectional Area of Cable: 0.1mm~0.15mm, 0.07mm
- Meets MIL-DTL-83513

Specifications

■Environment Temperature:	-55℃~+125℃
■Vibration:	10Hz~2000Hz,196m/s²
■Random Vibration:	Power spectrum density 0.4G²/Hz root mean square value of total acceleration 23.1G
■Shock:	735m/s² 11sm
■Rated Current:	3A
■Contact Resistance:	≤10mΩ
■Insulation Resistance:	≥5000MΩ
■Dielectric Strength:	800V
■Durability:	500 times

Contact Arrangements

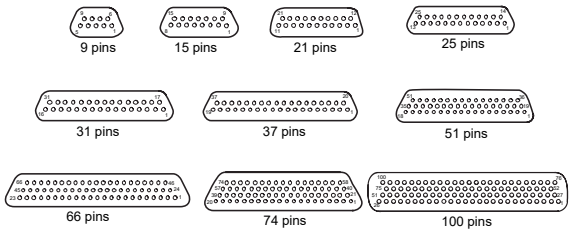

How To Order

Sample Part Number	R04J	-25	PI	W7	G	A1	-C	-26	9	10

Series:
R04J—Standard Type
R04JA—Fast Lock Type
R04JC—Sn-P Bronze Shell, Nickel Plating
R04JD—Assembly Hole is Threaded Hole:M2-6H
R04JS—Glue Sealing

Contact Number:
9, 15, 21, 25, 31, 37, 51, 66, 74, 100pins

Contact Type:
PI—Pin in Plug RH—Socket in Receptacle

Locking Hardware Type:
W7—Locking Hardware (See page 2) No Code—No Locking Hardware

Shell Material and Finish:
G—Aluminum Shell, Cadmium Plating No Code—Aluminum Shell, Nickel Plating

Cable Clamp Type:
A1—Cable Clamp (See page 3) No Code—No Cable Clamp

Extended Series :
No Code—R04J Crimping Connectors Basic Type
C—Cable Outlet Direction is Vertical to Contacts
D—With Anti-Rotation Slot on The Flange
Q8—The Sizes of Flange and Assembly Hole are Enlarged
(9.6)—The Width of Flange is 9.6mm
(11.6)—The Width of Flange is 11.6mm
Q—Widened Flange

Wire Gage:
26—AWG26

Wire Color:
9—White T—Ten Color Repeating

Wire Length:
10—Wire Length in cm. "10" Specifies 10cm

Sunkye International Co., Limited. Email: sales@sunkye.com Tel: 00852-69486797 Fax: 00852-31828508
Version Code 2021

Free End Locking Hardware For R04J Series Crimping Connectors

Type	A	B	Outline Dimensions	Assembly Picture	Matched with Locking Hardware
W	M2-6h	7.1	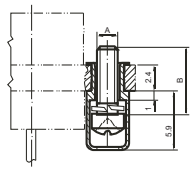	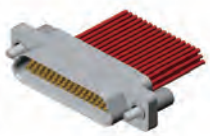	Q,Q0,Q2,Q3,Q4,Q5,Q7,Q8,Q9,Q10,Q11, Q14,Q15,Q17,Q23,Q25,Q29,Q32,Q35, Q36,Q37,Q41,Q42,Q43,Q45,Q46
W8	#2-56UNC-2A	7.1			Q1
W7	M2-6h	7.1	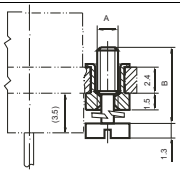	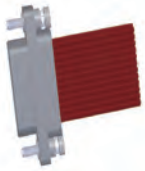	Q,Q0,Q2,Q3,Q4,Q5,Q7,Q8,Q9,Q10,Q11, Q14,Q15,Q17,Q23,Q25,Q29,Q32,Q35, Q36,Q37,Q41,Q42,Q43,Q45,Q46
W9			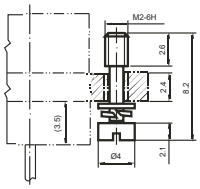	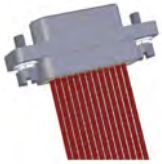	Q,Q0,Q2,Q3,Q4,Q5,Q7,Q8,Q9,Q10,Q11, Q14,Q15,Q17,Q23,Q25,Q29,Q32,Q35, Q36,Q37,Q41,Q42,Q43,Q45,Q46 Note：W9 is just suitable for R04JD series product.
N	M2-6h		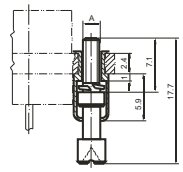	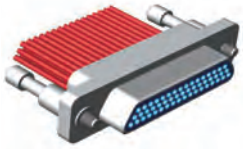	Q,Q0,Q2,Q3,Q4,Q5,Q7,Q8,Q9,Q10,Q11, Q14,Q15,Q17,Q23,Q25,Q29,Q32,Q35, Q36,Q37,Q41,Q42,Q43,Q45,Q46
N1	#2-56UNC-2A				Q1

Fixed End Locking Hardware For R04J Series Crimping Connectors

Type	A	B	C	Outline Dimensions	Assembly Picture	Matched with Locking Hardware	
Q	M2-6h	M2-6h	12.6	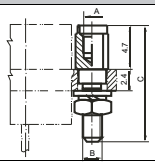	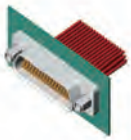	W, W7, W9, N	Note: Use with front panel mounting crimping connectors
Q1	#2-56UNC-2B	#2-56UNC-2A	12.6			W8, N1	
Q8	M2-6h	M2-6h	15.6			W,W7,W9,N	
Q9	M2-6h	M2-6h	21.6			W,W7,N	
Q0	4.1	0.6	12.6	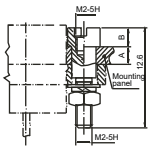	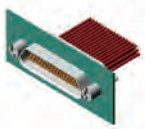	W, W7, W9, N Note: Use with rear panel mounting crimping connectors	
Q3	3.3	1.4	12.6				
Q4	2.5	2.2	12.6				
Q11	1.3	3.4	12.6				
Q45	2.7	2	20				
Q29	M3-6h	10.5	3.3min	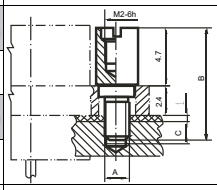		W,W7,W9,N Note:1. Use with front panel mounting crimping connectors 2. For R04JS series	
Q36	M3-6h	14.7	6min				
Q37	M2-6h	10	2.8min				
Q43	M3-6h	11.7	4min				
Q44	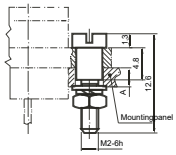 Front Panel Mounting			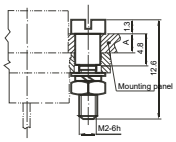 Rear Panel Mounting	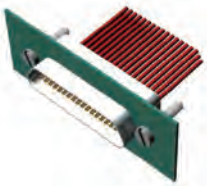	Note: 1. No need to lock with free end locking hardware 2. Front panel mounting, "A" dimension is 2.5~3.5mm 3. Rear panel mounting, (1)Mated with connectors without locking hardware, "A" dimension is 3.5mm max (2)Mated with connectors with fixed end locking hardware, "A" dimension is 4.9mm minus 1.3mm (The distance between bolt and flange of connector)	

Remark:1. Fixed end locking hardware apply to fix the connectors on the mounting panels or the PCB. Most fixed end locking hardware can be mated with free end locking hardware, but a little can not. (eg. Q44)
2. All dimensions are in mm.

R04J Series Cable Clamp

Type	Stereogram		Outline Dimensions	Using Conditions
A1	Only A2 Cable Clamp	Plug With A1 Cable Clamp	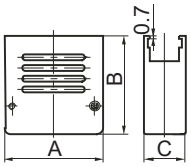	1. For R04J Crimp Basic Type 2. For Free End Locking Hardware
A2	Only A2 Cable Clamp	Plug With A2 Cable Clamp	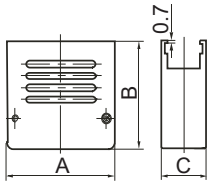	For R04J-9~51PI/RH-Q8
A3	Only A3 Cable Clamp	Plug With A3 Cable Clamp	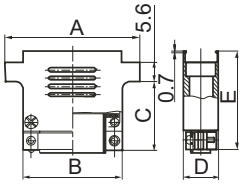	1.For R04J Crimp Basic Type 2.For R04J Solder Cup Basic Type

Pin Count	A1			A2			A3				
	A	B	C	A	B	C	A	B	C	D	E
9	9.9	23.6	10.4	11.7	22	13.4	19.6	9.9	18.2	10.4	27
15	13.8	23.8	10.4	15.6	22	13.4	23.5	13.8	18.2	10.4	27
21	17.6	23.6	10.4	19.4	22	13.4	27.4	17.6	19.2	10.4	28
25	20.2	23.6	10.4	22	22	13.4	29.8	20.2	19.2	10.4	28
31	24	23.6	10.4	25.8	22	13.4	33.6	24	19.2	10.4	28
37	27.8	23.6	10.4	29.6	22	13.4	37.4	27.8	19.2	10.4	28
51	26.6	26.6	11.2	28.4	22	14.6	36.4	26.6	21.2	11.2	30
66	33	26.6	11.2	---	---	---	42.9	29.1	21.2	11.2	30
74	29.1	30	12	---	---	---	38.8	29.1	21.2	12	30
100	40.7	30	12	---	---	---	54.7	40.7	21.2	12	30

Remark: All dimensions are in mm.

Sunkye International Co., Limited. Email: sales@sunkye.com Tel: 00852-69486797 Fax: 00852-31828508
Version Code 2021

R04J Series Crimping Connectors - Basic Type

- **Contacts:** R04J- 9, 15, 21, 25, 31, 37, 51, 66, 74, 100 PI /RH(G)
- **Shell Plating:** Nickel or Cadmium

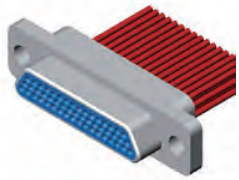
Plug:PI

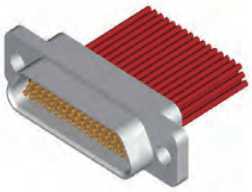
Receptacle:RH

Plug:PIG

Receptacle:RHG

Outline Dimensions

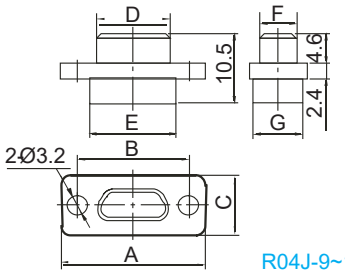

R04J-9~100PI

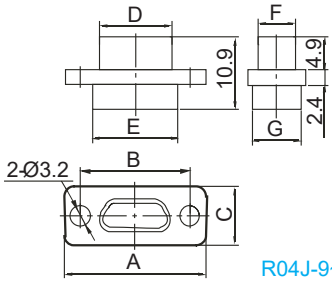

R04J-9~100RH

Part Number	A	B	C	D	E	F	G
R04J-9PI/PIG	19.6	14.3	7.6	8.3	9.9	4.7	6.8
R04J-15PI/PIG	23.5	18.2	7.6	12.3	13.8	4.7	6.8
R04J-21PI/PIG	27.4	22	7.6	16	17.6	4.7	6.8
R04J-25PI/PIG	29.8	24.5	7.6	18.6	20.2	4.7	6.8
R04J-31PI/PIG	33.6	28.3	7.6	22.4	24	4.7	6.8
R04J-37PI/PIG	37.4	32.2	7.6	26.3	27.8	4.7	6.8
R04J-51PI/PIG	36.4	30.86	8.7	25	26.6	5.8	7.9
R04J-66PI/PIG	42.9	37.3	8.7	31.4	33	5.8	7.9
R04J-74PI/PIG	38.8	33.5	9.7	27.5	29.1	6.8	9.1
R04J-100PI/PIG	54.7	45.7	9.7	35	36.6	6.8	9.1
R04J-9RH/RHG	19.6	14.3	7.6	9.8	9.9	6.1	6.8
R04J-15RH/RHG	23.5	18.2	7.6	13.7	13.8	6.1	6.8
R04J-21RH/RHG	27.4	22	7.6	17.4	17.6	6.1	6.8
R04J-25RH/RHG	29.8	24.5	7.6	20	20.2	6.1	6.8
R04J-31RH/RHG	33.6	28.3	7.6	23.8	24	6.1	6.8
R04J-37RH/RHG	37.4	32.2	7.6	27.7	27.8	6.1	6.8
R04J-51RH/RHG	36.4	30.86	8.7	26.5	26.6	7.2	7.9
R04J-66RH/RHG	42.9	37.3	8.7	32.9	33	7.2	7.9
R04J-74RH/RHG	38.8	33.5	9.7	29	29.1	8.3	9.1
R04J-100RH/RHG	54.7	45.7	9.7	36.6	36.65	8.2	9.1

Remark: All dimensions are in mm.

Outline Dimensions After Mating (Without Cable Clamp)

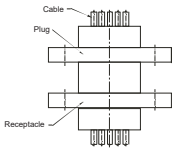

The Main View

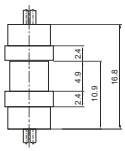

The Left View

R04JC Series Crimping Connectors - Basic Type

- Sn-P Bronze Shell, Nickel Plating
- **Contacts:** R04JC- 9, 15, 21, 25, 31, 37, 51, 66, 74, 100PI/RH
- **Outline Dimensions:** Same as R04J Crimping Connectors Basic Type (See above datasheet)

R04J Series Crimping Connectors - Extended Type C

- The Outlet Direction of Cable is Vertical to The Contacts, Crimp Termination
- **Contacts:** R04J- 9, 15, 21, 25, 31, 37, 51, 66, 74, 100 PI/RH-C

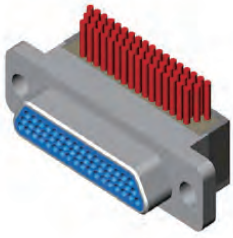

Plug:PI-C

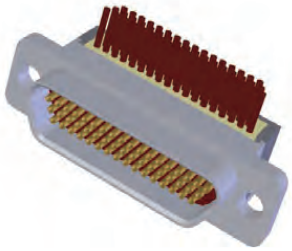

Receptacle:RH-C

Outline Dimensions

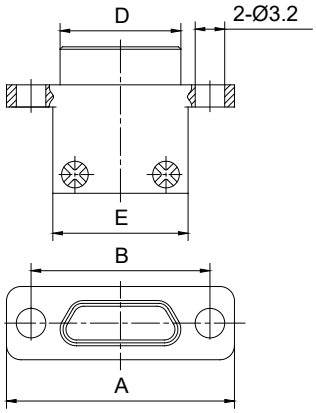

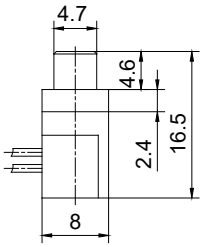

R04J-9~37PI-C

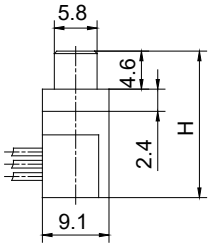

R04J-51, 66PI-C

H size for 51pin is 15.5
H size for 66pin is 17.8

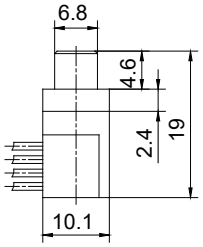

R04J-74, 100PI-C

R04J-9~100PI-C

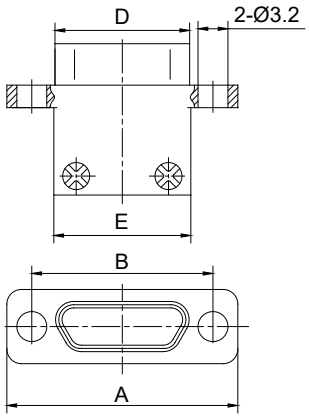

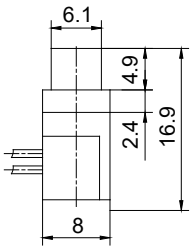

R04J-9~37RH-C

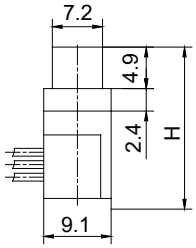

R04J-51, 66RH-C

H size for 51pin is 15.5
H size for 66pin is 17.8

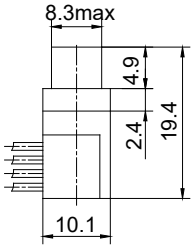

R04J-74, 100RH-C

R04J-9~100RH-C

Part Number	A	B	D		E
			PI-C	RH-C	
R04J-9PI/RH-C	19.6	14.3	8.3	9.8	9.9
R04J-15PI/RH-C	23.5	18.2	12.3	13.7	13.8
R04J-21PI/RH-C	27.4	22	16	17.4	17.6
R04J-25PI/RH-C	29.8	24.5	18.6	20	20.2
R04J-31PI/RH-C	38.6	28.3	22.4	23.8	24
R04J-37PI/RH-C	37.4	32.2	26.3	27.7	27.8
R04J-51PI/RH-C	36.4	30.86	25	26.5	26.6
RD4J-66PI/RH-C	42.9	37.3	31.4	32.9	33
RD4J-74PI/RH-C	38.8	33.5	27.5	29	29.1
R04J-100PI/RH-C	54.7	45.7	35	36.6	36.6

Remark: 1.All dimensions are in mm.
2.The outlet direction of cable for R04J-9~100PI-C is opposite to R04J-9~100RH-C.

Sunkye International Co., Limited. Email: sales@sunkye.com Tel: 00852-69486797 Fax: 00852-31828508
Version Code 2021

R04J Series Crimping Connectors - Extended Type D

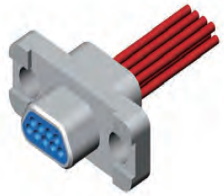

Plug:PI-D

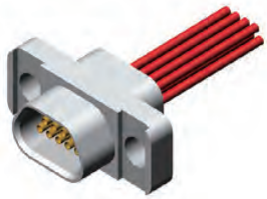

Receptacle:RH-D

- With Anti-Rotation Slots on The Flange
- **Contacts:**
  R04J- 9, 15, 21, 25, 31, 37, 51, 66, 74, 100 PI/RH-D

Outline Dimensions

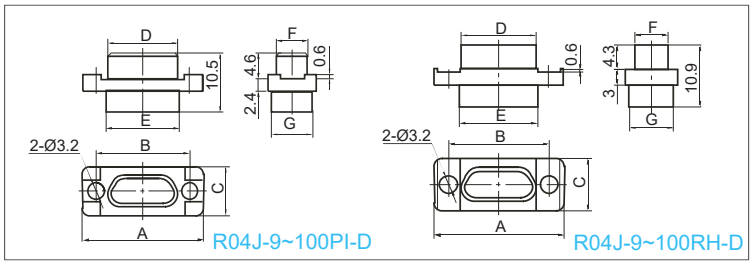

Part Number	A	B	C	D		E	F		G
				PI-D	RH-D		PI-D	RH-D	
R04J-9PI/RH-D	19.6	14.3	7.6	8.3	9.8	9.9	4.7	6.1	6.8
R04J-15PI/RH-D	23.5	18.2	7.6	12.3	13.7	13.8	4.7	6.1	6.8
R04J-21PI/RH-D	27.4	22	7.6	16	17.4	17.6	4.7	6.1	6.8
R04J-25PI/RH-D	29.8	24.5	7.6	18.6	20	20.2	4.7	6.1	6.8
R04J-31PI/RH-D	33.6	28.3	7.6	22.4	23.8	24	4.7	6.1	6.8
R04J-37PI/RH-D	37.4	32.2	7.6	26.3	27.7	27.8	4.7	6.1	6.8
R04J-51PI/RH-D	36.4	30.86	8.7	25	26.5	26.6	5.8	7.2	7.9
R04J-66PI/RH-D	42.9	37.3	8.7	31.4	32.9	33	5.8	7.2	7.9
R04J-74PI/RH-D	38.8	33.5	9.7	27.5	29	29.1	6.8	8.3	9.1
R04J-100PI/RH-D	54.7	45.7	9.7	35	36.6	36.6 / 36.65	6.8	8.2	9.1

R04J Series Crimping Connectors - Extended Type(9.6)

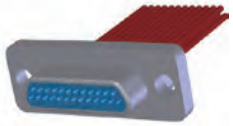

Plug:PI(9.6)

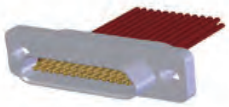

Receptacle:RH(9.6)

- The Width of Flange is 9.6mm.
- **Contacts:**
  R04J- 9, 15, 21, 25, 31, 37PI/RH(9.6)

Outline Dimensions

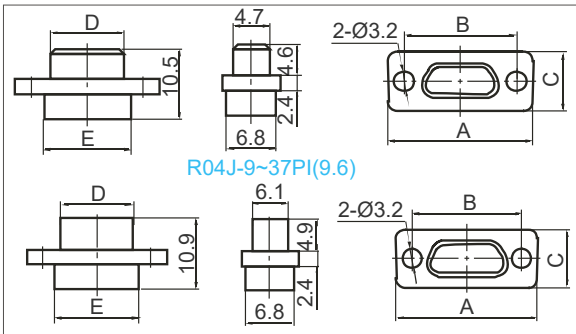

Part Number	A	B	C	D		E
				PI	RH	
R04J-9PI/RH(9.6)	19.6	14.3	9.6	8.3	9.8	9.9
R04J-15PI/RH(9.6)	23.5	18.2	9.6	12.3	13.7	13.8
R04J-21PI/RH(9.6)	27.4	22	9.6	16	17.4	17.6
R04J-25PI/RH(9.6)	29.8	24.5	9.6	18.6	20	20.2
R04J-31PI/RH(9.6)	33.6	28.3	9.6	22.4	23.8	24
R04J-37PI/RH(9.6)	37.4	32.2	9.6	26.3	27.7	27.8

Remark: All dimensions are in mm.

R04J Series Crimping Connectors - Extended Type(11.6)

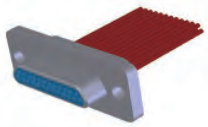

Plug:PI(11.6)

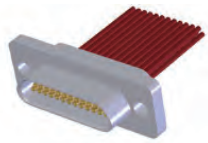

Receptacle:RH(11.6)

- The Width of Flange is 11.6mm.
- **Contacts:**
  R04J- 9, 15, 21, 25, 31, 37PI/RH(11.6)

Outline Dimensions

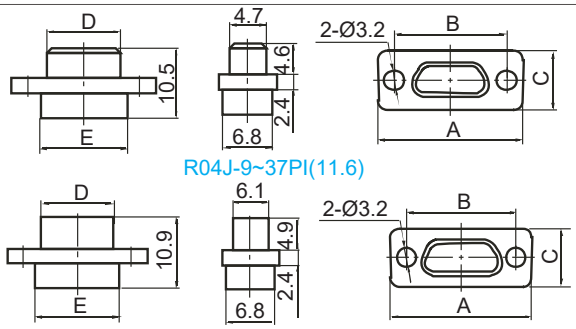

Part Number	A	B	C	D		E
				PI	RH	
R04J-9PI/RH(11.6)	19.6	14.3	11.6	8.3	9.8	9.9
R04J-15PI/RH(11.6)	23.5	18.2	11.6	12.3	13.7	13.8
R04J-21PI/RH(11.6)	27.4	22	11.6	16	17.4	17.6
R04J-25PI/RH(11.6)	29.8	24.5	11.6	18.6	20	20.2
R04J-31PI/RH(11.6)	33.6	28.3	11.6	22.4	23.8	24
R04J-37PI/RH(11.6)	37.4	32.2	11.6	26.3	27.7	27.8

R04J Series Crimping Connectors - Extended Type Q

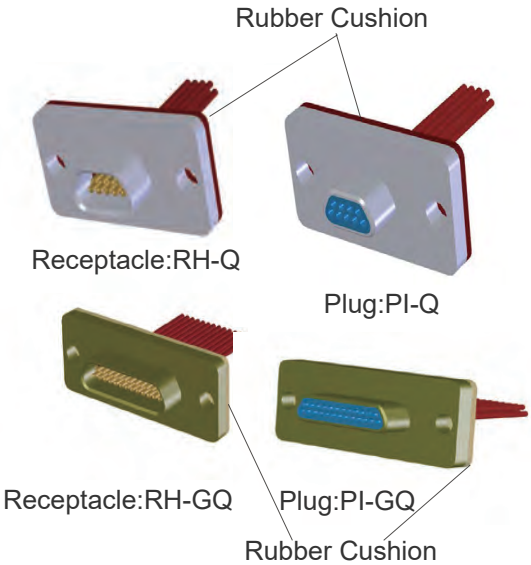

- The Flange is Widened
- With A Rubber Cushion, Thickness:1mm
- **Shell Plating**: Nickel or Cadmium
- **Contacts:**
  R04J- 9, 15, 21, 25, 31, 37, 51, 66, 74, 100PI/RH-Q/GQ

Outline Dimensions

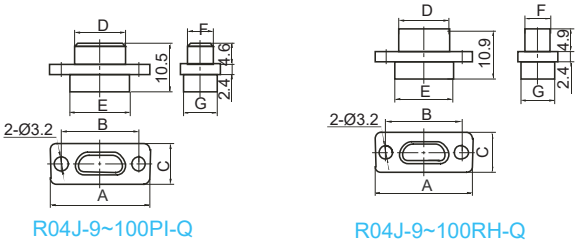

Part Number	A	B	C	D		E	F		G
				PI	RH		PI	RH	
R04J-9PI/RH-Q	26	21	14	8.3	9.8	9.9	4.7	6.1	6.8
R04J-15PI/RH-Q	29.9	24.9	14	12.3	13.7	13.8	4.7	6.1	6.8
R04J-21PI/RH-Q	33.8	28.7	14	16	17.4	17.6	4.7	6.1	6.8
R04J-25PI/RH-Q	36.2	31.2	14	18.6	20	20.2	4.7	6.1	6.8
R04J-31PI/RH-Q	40	35	14	22.4	23.8	24	4.7	6.1	6.8
R04J-37PI/RH-Q	43.8	38.9	14	26.3	27.7	27.8	4.7	6.1	8.8
R04J-51PI/RH-Q	42.6	37.6	15.2	25	26.5	26.6	5.8	7.2	7.9
R04J-66PI/RH-Q	49.3	44	15.2	31.4	32.9	33	5.8	7.2	7.9
R04J-77PI/RH-Q	45.2	40.2	16.1	27.5	29	29.1	6.8	8.3	9.1
R04J-100PI/RH-Q	61.1	52.4	16.1	35	36.6	36.6 / 36.65	6.8	8.2	9.1

Remark: All dimensions are in mm.

Sunkye International Co., Limited. Email: sales@sunkye.com Tel: 00852-69486797 Fax: 00852-31828508
Version Code 2021

R04JC Series Crimping Connectors - Extended Type Q

- Sn-P Bronze Outer Shell, Nickel Plating
- The Flange is Widened
- Same as R04J-9~100RH-Q, Please See The Datasheet on Page 7
- Contacts: R04JC-9, 15, 21, 31, 37, 51, 66, 74, 100RH-Q
- With A Rubber Cushion, Thickness:1mm

R04J Series Crimping Connectors - Extended Type Q8

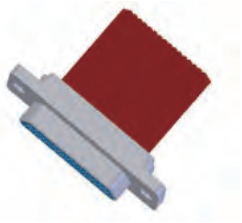

Plug:PI-Q8

Receptacle:RH-Q8

- The Sizes of Flange and Assembly Hole are Enlarged
- **Contacts:**
  R04J- 9, 15, 21, 25, 31, 37, 51, 66, 74, 100PI/RH-Q8

Outline Dimensions

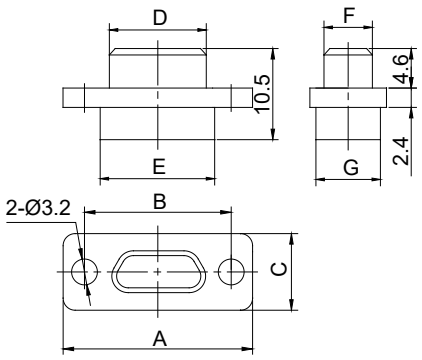

R04J-9~51PI-Q8

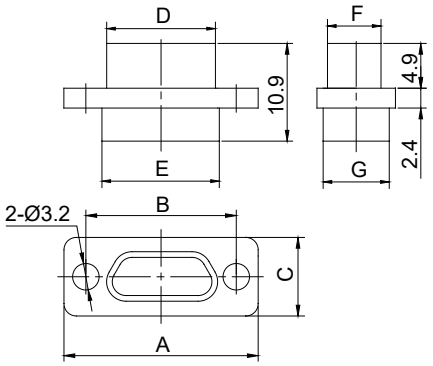

R04J-9~51RH-Q8

Part Number	A	B	C	D		E	F		G
				PI-Q8	RH-Q8		PI-Q8	RH-Q8	
R04J-9PI/RH-Q8	21.4	16.1	11.6	8.3	9.8	11.7	4.7	6.1	6.8
R04J-15PI/RH-Q8	25.3	20	11.6	12.3	13.7	15.6	4.7	6.1	6.8
R04J-21PI/RH-Q8	29.2	23.8	11.6	16	17.4	19.4	4.7	6.1	6.8
R04J-25PI/RH-Q8	31.6	26.3	11.6	18.6	20	22	4.7	6.1	6.8
R04J-31PI/RH-Q8	35.4	30.1	11.6	22.4	23.8	25.8	4.7	6.1	6.8
R04J-37PI/RH-Q8	39.2	34	11.6	26.3	27.7	29.6	4.7	6.1	6.8
R04J-51PI/RH-Q8	38.2	32.6	12.6	25	26.5	28.4	5.8	7.2	7.9
R04J-66PI/RH-Q8									
R04J-74PI/RH-Q8									
R04J-100PI/RH-Q8									

Remark: All dimensions are in mm.

R04J Series Crimping Connectors - Extended Type A1D

Plug:PI-A1D

Receptacle:RH-A1D

- With Anti-Rotation Slots on The Flange
- With Shielded Cable Clamp on The Tail of Outer Shell
- **Contacts:**
  R04J- 9, 15, 21, 25, 31, 37, 51, 66, 74, 100PI/RH-A1D

Outline Dimensions

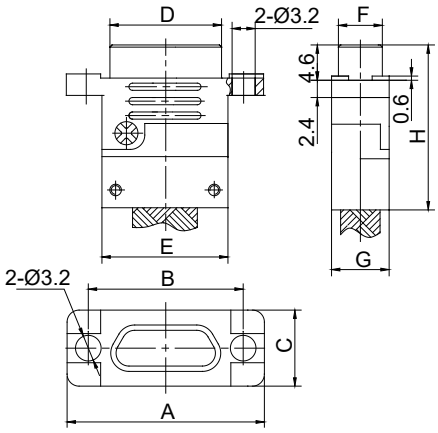

R04J-9~100PI-A1D

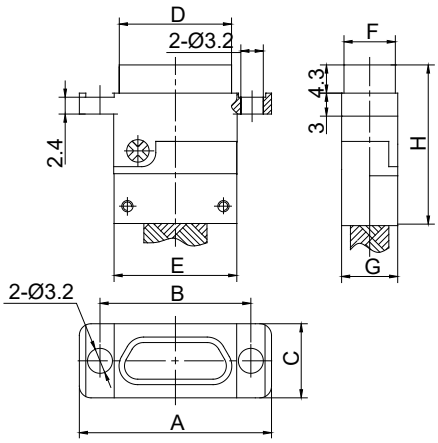

R04J-9~100RH-A1D

Part Number	A	B	D		E	F		G	H	
			PI-A1D	RH-A1D		PI-A1D	RH-A1D		PI-A1D	RH-A1D
R04J-9PI/RH-A1D	19.6	14.3	8.3	9.8	9.9	4.7	6.1	8	23	23.5
R04J-15PI/RH-A1D	23.5	18.2	12.3	13.7	13.8	4.7	6.1	8	23	23.5
R04J-21PI/RH-A1D	27.4	22	16	17.4	17.6	4.7	6.1	8	23	23.5
R04J-25PI/RH-A1D	29.8	24.5	18.6	20	20.2	4.7	6.1	8	23	23.5
R04J-31PI/RH-A1D	33.6	28.3	22.4	23.8	24	4.7	6.1	8	23	23.5
R04J-37PI/RH-A1D	37.4	32.2	26.3	27.7	27.8	4.7	6.1	8	23	23.5
R04J-51PI/RH-A1D	36.4	30.86	25	26.5	26.6	5.8	7.2	9	23	23.5
R04J-66PI/RH-A1D	42.9	37.3	31.4	32.9	33	5.8	7.2	9	23	23.5
R04J-74PI/RH-A1D	38.8	33.5	27.5	29	29.1	6.8	8.3	11	25	25.5
R04J-100PI/RH-A1D	54.7	45.7	35	36.6	36.8	6.8	8.2	11	25	25.5

Remark: All dimensions are in mm.

Sunkye International Co., Limited. Email: sales@sunkye.com Tel: 00852-69486797 Fax: 00852-31828508
Version Code 2021

R04J Series Crimping Connectors Basic Type A1/GA1

Plug:PI-A1

Receptacle:RH-A1

- With Shielded Cable Clamp on The Tail of Outer Shell
- **Shell Plating:** Nickel
- **Contacts:**
  R04J- 9, 15, 21, 25, 31, 37, 51, 66, 74, 100PI/RH-A1

Plug:PI-GA1

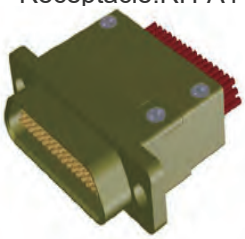

Receptacle:RH-GA1

- With Shielded Cable Clamp on The Tail of Outer Shell
- **Shell Plating:** Cadmium
- **Contacts:**
  R04J- 9, 15, 21, 25, 31, 37, 51, 66, 74, 100PI/RH-GA1

Outline Dimensions

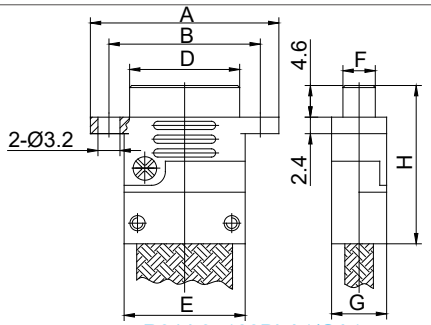

R04J-9~100PI-A1/GA1

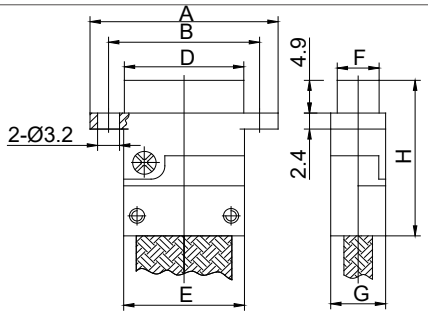

R04J-9~100RH-A1/GA1

Part Number	A	B	D		E	F		G	H	
			PI	RH		PI	RH		PI	RH
R04J-9PI/RH-A1/GA1	19.6	14.3	8.3	9.8	9.9	4.7	6.1	8	23	23.5
R04J-15PI/RH-A1/GA1	23.5	18.2	12.3	13.7	13.8	4.7	6.1	8	23	23.5
R04J-21PI/RH-A1/GA1	27.4	22	16	17.4	17.6	4.7	6.1	8	23	23.5
R04J-25PI/RH-A1/GA1	29.8	24.5	18.6	20	20.2	4.7	6.1	8	23	23.5
R04J-31PI/RH-A1/GA1	33.6	28.3	22.4	23.8	24	4.7	6.1	8	23	23.5
R04J-37PI/RH-A1/GA1	37.4	32.2	26.3	27.7	27.8	4.7	6.1	8	23	23.5
R04J-51PI/RH-A1/GA1	36.4	30.86	25	26.5	26.6	5.8	7.2	9	23	23.5
R04J-66PI/RH-A1/GA1	42.9	37.3	31.4	32.9	33	5.8	7.2	9	23	23.5
R04J-74PI/RH-A1/GA1	38.8	33.5	27.5	29	29.1	6.8	8.3	11	25	25.5
R04J-100PI/RH-A1/GA1	54.7	45.7	35	36.6	36.8	6.8	8.2	11	25	25.5

Outline Dimensions After Mating

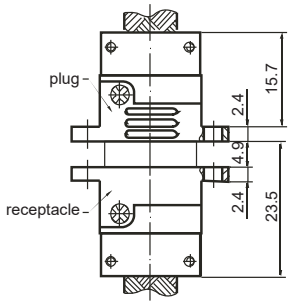

9~66 pins

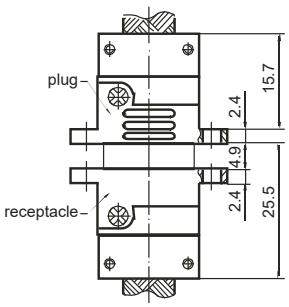

74, 100 pins

Remark: All dimensions are in mm.

R04J Series Crimping Connectors - Extended Type A1(9.6)

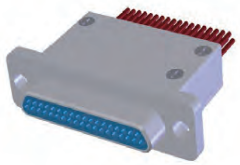

Plug:PI-A1(9.6)

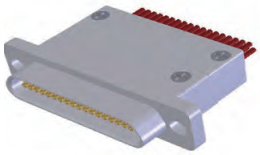

Receptacle:RH-A1(9.6)

- The Width of Flange is 9.6mm
- With Shielded Cable Clamp on The Tail of Outer Shell
- **Contacts:**
  R04J- 9, 15, 21, 25, 31, 37PI/RH-A1(9.6)

Outline Dimensions

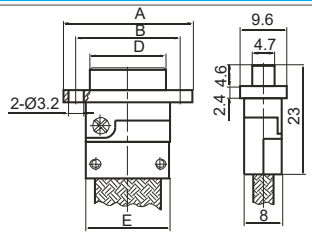

R04J-9~37PI-A(9.6)

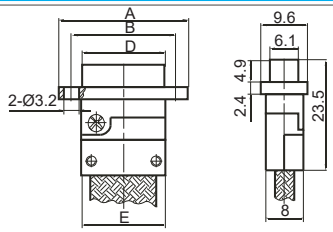

R04J-9~37RH-A(9.6)

Part Number	A	B	D		E
			PI-A1(9.6)	RH-A1(9.6)	
R04J-9PI/RH-A1(9.6)	19.6	14.3	8.3	9.8	9.9
R04J-15PI/RH-A1(9.6)	23.5	18.2	12.3	13.7	13.8
R04J-21PI/RH-A1(9.6)	27.4	22	16	17.4	17.6
R04J-25PI/RH-A1(9.6)	29.8	24.5	18.6	20	20.2
R04J-31PI/RH-A1(9.6)	33.6	28.3	22.4	23.8	24
R04J-37PI/RH-A1(9.6)	37.4	32.2	26.3	27.7	27.8

R04J Series Crimping Connectors - Extended Type A1D(11.6)

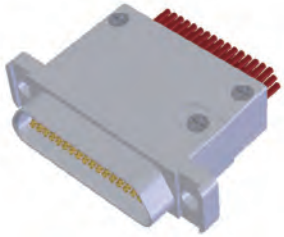

Receptacle:RH-A1D(11.6)

- The Width of Flange is 11.6mm
- With Shielded Cable Clamp on The Tail of Outer Shell
- With Anti-Rotation Slots on The Flange
- **Contacts:**
  R04J- 9, 15, 21, 25, 31, 37PI/RH-A1D(11.6)

Outline Dimensions

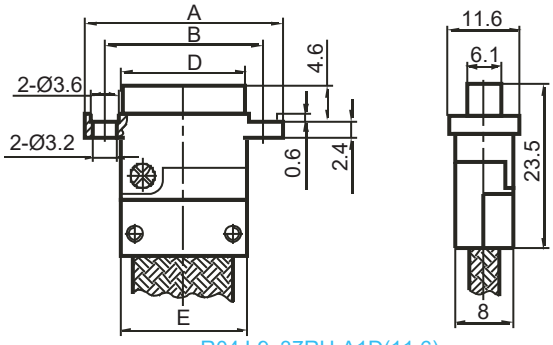

R04J-9~37RH-A1D(11.6)

Part Number	A	B	D	E
R04J-9RH-A1D(11.6)	19.6	14.3	9.8	9.9
R04J-15RH-A1D(11.6)	23.5	18.2	13.7	13.8
R04J-21RH-A1D(11.6)	27.4	22	17.4	17.6
R04J-25RH-A1D(11.6)	29.8	24.5	20	20.2
R04J-31RH-A1D(11.6)	33.6	28.3	23.8	24
R04J-37RH-A1D(11.6)	37.4	32.2	27.7	27.8

Remark: All dimensions are in mm.

Sunkye International Co., Limited. Email: sales@sunkye.com Tel: 00852-69486797 Fax: 00852-31828508
Version Code 2021

R04J Series Crimping Connectors - Extended Type A2Q8

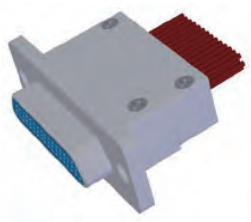

Plug:PI-A2Q8

Receptacle:RH-A2Q8

- The Flange Size And Assembly Hole Size are Enlarged From R04J-9~100PI/RH-A1
- With Shielded Cable Clamp on The Tail of Outer Shell
- **Contacts:**
  R04J- 9, 15, 21, 25, 31, 37, 51, 74, 100PI/RH-A2Q8

Outline Dimensions

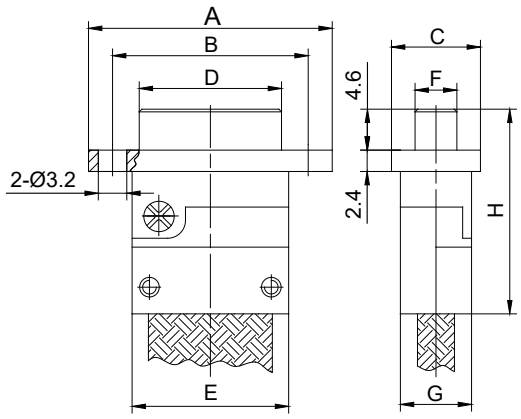

R04J-9~100-A2Q8

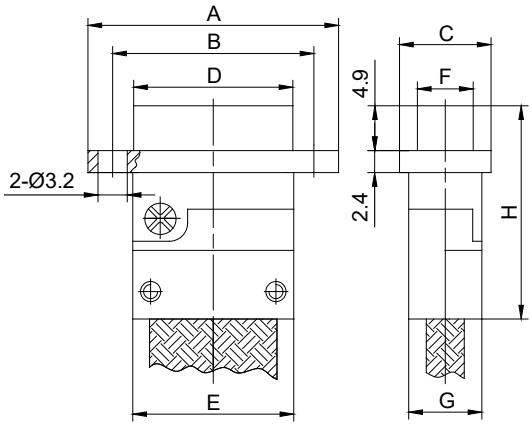

R04J-9~100RH-A2Q8

Part Number	A	B	C	D		E	F		G	H	
				PI-A2Q8	RH-A2Q8		PI-A2Q8	RH-A2Q8		PI-A2Q8	RH-A2Q8
R04J-9PI/RH-A2Q8	21.4	16.1	11.6	8.3	9.8	9.9	4.7	6.1	8	23	23.5
R04J-15PI/RH-A2Q8	25.3	20	11.6	12.3	13.7	13.8	4.7	6.1	8	23	23.5
R04J-21PI/RH-A2Q8	29.2	23.8	11.6	16	17.4	17.6	4.7	6.1	8	23	23.5
R04J-25PI/RH-A2Q8	31.6	26.3	11.6	18.6	20	20.2	4.7	6.1	8	23	23.5
R04J-31PI/RH-A2Q8	35.4	30.1	11.6	22.4	23.8	24	4.7	6.1	8	23	23.5
R04J-37PI/RH-A2Q8	39.2	34	11.6	26.3	27.7	27.8	4.7	6.1	8	23	23.5
R04J-51PI/RH-A2Q8	38.2	32.6	12.6	25	26.5	26.6	5.8	7.2	9	23	23.5
R04J-74PI/RH-A2Q8	40.6	37.1	13.8	27.5	29	29.1	6.8	8.3	11	25	25.5
R04J-100PI/RH-A2Q8	56.5	49.3	13.8	35	36.6	36.8	6.8	8.2	11	25	25.5

Remark: All dimensions are in mm.

R04J Series Crimping Connectors - Extended Type GA1Q

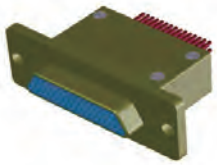

Plug:PI-GA1Q

Receptacle:RH-GA1Q

- **Shell Plating:** Cadmium
- With Shielded Cable Clamp on The Tail of Outer Shell
- The Flange is Widened
- **Contacts:**
  R04J- 9, 15, 21, 25, 31, 37, 51,66, 74, 100PI/RH-GA1Q

Outline Dimensions

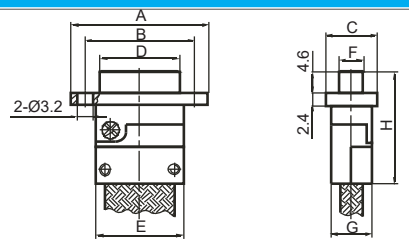

R04J-9~100PI-GA1Q

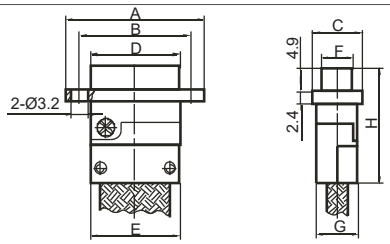

R04J-9~100RH-GA1Q

Part Number	A	B	C	D		E	F		G	H	
				PI	RH		PI	RH		PI	RH
R04J-9PI/RH-GA1Q	26	21	14	8.3	9.8	9.9	4.7	6.1	8	23	23.5
R04J-15PI/RH-GA1Q	29.9	24.9	14	12.3	13.7	13.8	4.7	6.1	8	23	23.5
R04J-21PI/RH-GA1Q	33.8	28.7	14	16	17.4	17.6	4.7	6.1	8	23	23.5
R04J-25PI/RH-GA1Q	36.2	31.2	14	18.6	20	20.2	4.7	6.1	8	23	23.5
R04J-31PI/RH-GA1Q	40	35	14	22.4	23.8	24	4.7	6.1	8	23	23.5
R04J-37PI/RH-GA1Q	43.8	38.9	14	26.3	27.7	27.8	4.7	6.1	8	23	23.5
R04J-51PI/RH-GA1Q	42.6	37.6	15.2	25	26.5	26.6	5.8	7.2	9	23	23.5
R04J-66PI/RH-GA1Q	49.3	44	15.2	31.4	32.9	33	5.8	7.2	9	23	23.5
R04J-74PI/RH-GA1Q	45.2	40.2	16.1	27.5	29	29.1	6.8	8.3	11	25	25.5
R04J-100PI/RH-GA1Q	61.1	52.4	16.1	35	36.6	36.8	6.8	8.2	11	25	25.5

R04J Series Crimping Connectors - Fast Lock Type R04JA

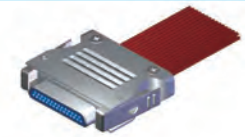

Plug: R04JA-PI

Receptacle: R04JA-RH

- With Fast Lock Function
- **Termination Type:** Crimp Contact
- **Contacts:**
  R04JA-9, 15, 21, 25, 31, 37, 51, 66, 74, 100PI/RH

Outline Dimensions

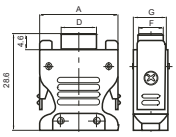

R04JA-9~100PI

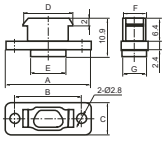

R04JA-9~100RH

Part Number	A	D	F	G	Part Number	A	B	C	D	E	F	G
R04JA-9PI	18.2	8.4	4.7	8.1	R04JA-9RH	23.4	18.6	7.6	14.3	9.8	6.5	6.8
R04JA-15PI	22.1	12.3	4.7	8.1	R04JA-15RH	27.4	22.6	7.6	18.3	13.8	6.5	6.8
R04JA-21PI	25.8	16	4.7	8.1	R04JA-21RH	31.1	26.3	7.6	22	17.5	6.5	6.8
R04JA-25PI	28.4	18.6	4.7	8.1	R04JA-25RH	33.7	28.9	7.6	24.6	20.1	6.5	6.8
R04JA-31PI	32.2	22.4	4.7	8.1	R04JA-31RH	37.5	32.7	7.6	28.4	24.1	6.5	6.8
R04JA-37PI	36	26.3	4.7	8.1	R04JA-37RH	41.4	36.6	7.6	32.3	27.8	6.5	6.8
R04JA-51PI	34.8	25	5.8	10	R04JA-51RH	40.1	35.3	8.7	31	26.5	7.6	7.9
R04JA-66PI					R04JA-66RH							
R04JA-74PI	37.3	27.5	6.8	11	R04JA-74RH	42.6	37.8	9.8	33.5	29	8.7	9
R04JA-100PI	44.8	35	6.8	11	R04JA-100RH	50.1	45.3	9.8	41	36.5	8.7	9

Outline Dimensions After Mating

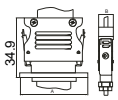

Part Number	A	B	Part Number	A	B
R04JA-9PI/RH	23.4	8.1	R04JA-37PI/RH	41.4	8.1
R04JA-15PI/RH	27.4	8.1	R04JA-51PI/RH	40.1	10
R04JA-21PI/RH	31.1	8,1	R04JA-74PI/RH	42.6	11
R04JA-25PI/RH	33.7	8.1	R04JA-100PI/RH	50.1	11
R04JA-31PI/RH	37.5	8.1			

Remark: All dimensions are in mm.

Sunkye International Co., Limited. Email: sales@sunkye.com Tel: 00852-69486797 Fax: 00852-31828508
Version Code 2021

R04J Series Crimping Connectors - Extended Type R04JD

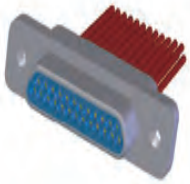

Plug: R04JD-PI

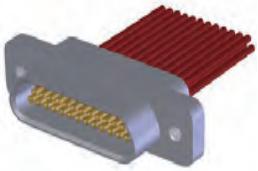

Receptacle: R04JD-RH

- The Assembly Hole is Threaded Hole: M2-6H
- **Termination Type:** Crimp Contact
- **Contacts:**
  R04JD-9, 15, 21, 25, 31, 37, 51, 66, 74, 100PI/RH

Outline Dimensions

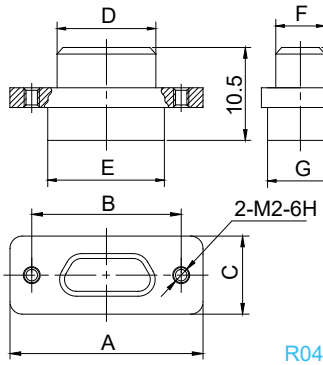

R04JD-9~100PI

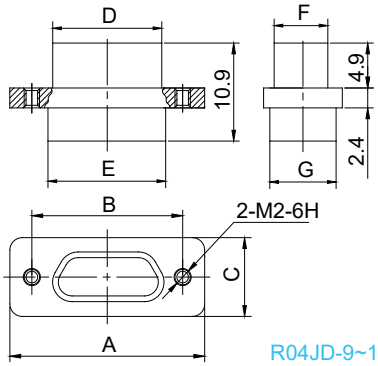

R04JD-9~100RH

Part Number	A	B	C	D		E	F		G
				PI	RH		PI	RH	
R04JD-9PI/RH	19.6	14.3	7.6	8.3	9.8	9.9	4.7	6.1	6.8
R04JD-15PI/RH	23.5	18.2	7.6	12.3	13.7	13.8	4.7	6.1	6.8
R04JD-21PI/RH	27.4	22	7.6	16	17.4	17.6	4.7	6.1	6.8
R04JD-25PI/RH	29.8	24.5	7.6	18.6	20	20.2	4.7	6.1	6.8
R04JD-31PI/RH	33.6	28.3	7.6	22.4	23.8	24	4.7	6.1	6.8
R04JD-37PI/RH	37.4	32.2	7.6	26.3	27.7	27.8	4.7	6.1	6.8
R04JD-51PI/RH	36.4	30.86	8.7	25	26.5	26.6	5.8	7.2	7.9
R04JD-66PI/RH	42.9	37.3	8.7	31.4	32.9	33	5.8	7.2	7.9
R04JD-74PI/RH	38.8	33.5	9.7	27.5	29	29.1	6.8	8.3	9.1
R04JD-100PI/RH	54.7	45.7	9.7	35	36.6	36.6 / 36.65	6.8	8.2	9.1

Outline Dimensions After Mating

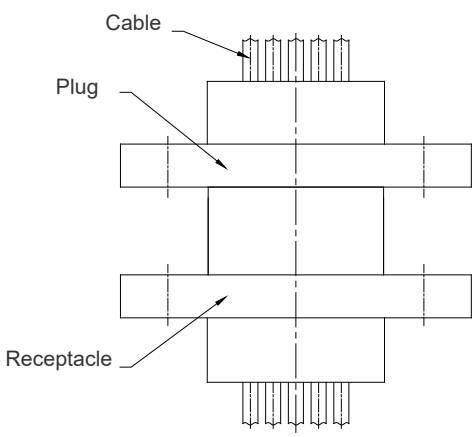

The Main View

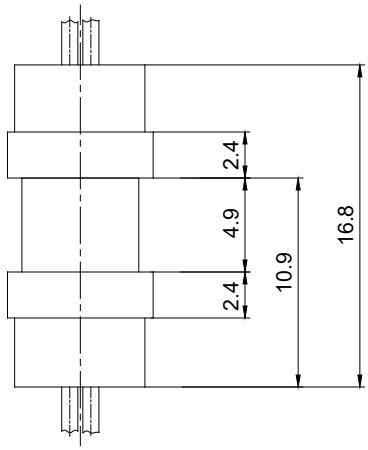

The Left View

Remark: All dimensions are in mm.

R04J Series Crimping Connectors- Glue Sealing Type R04JS

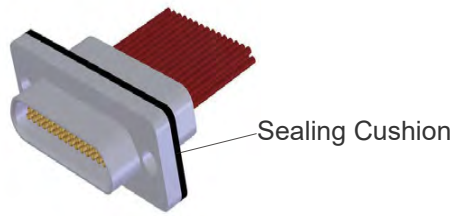

Receptacle: R04JS-RH

- Glue Sealing
- With A Sealing Cushion, Thickness: 1mm
- **Termination Type:** Crimp Contact
- **The Air Leakage Rate:** 5×10^{-2}Pa.CM/s^3
- **Insulation Resistance:** ≥2000MΩ
- **Contacts:**
  R04JS-9, 15, 21, 25, 31, 37, 51, 66, 74, 100RH

Outline Dimensions

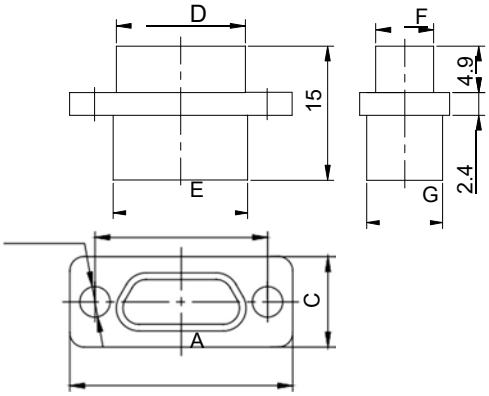

Part Number	A	B	C	D	E	F	G
R04JS-9RH	19.6	14.3	12	9.8	9.9	6.1	6.8
R04JS-15RH	23.5	18.2	12	13.7	13.8	6.1	6.8
R04JS-21RH	27.4	22	12	17.4	17.6	6.1	6.8
R04JS-25RH	29.8	24.5	12	20	20.2	6.1	6.8
R04JS-31RH	33.6	28.3	12	23.8	24	6.1	6.8
R04JS-37RH	37.4	32.2	12	27.7	27.8	6.1	6.8
R04JS-51RH	36.4	30.86	13	26.5	26.6	7.2	7.9
R04JS-66RH							
R04JS-74RH	38.8	33.5	14	29	29.1	8.3	9.1
R04JS-100RH	54.7	45.7	14	36.65	36.8	3.2	9.1

R04J Series Crimping Connectors - Mounting Hole Dimensions

- **Suitable For Product:** R04J-*PI/RH R04J-*PI/RH-D R04J-*PIG/RHG R04J-*PI/RH(9.6) R04J-*PI/RH(11.6) R04JC-*PI/RH R04J-*RH

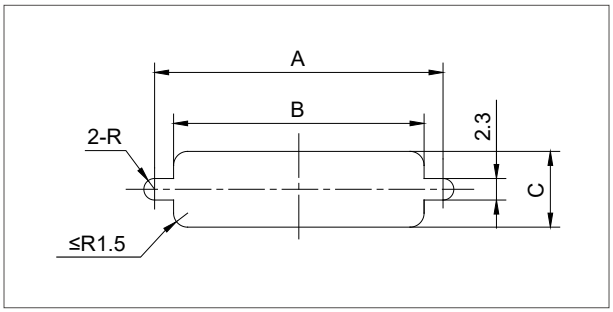

Mounting Hole Dimensions For Front Panel Mounting

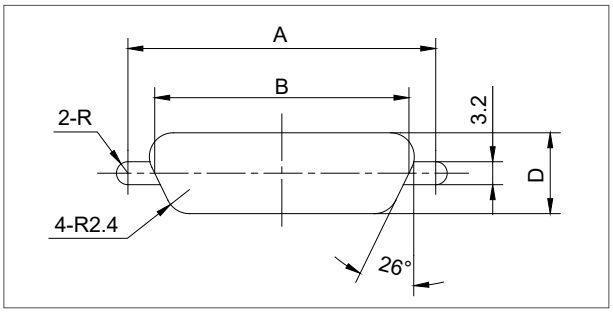

Mounting Hole Dimensions For Rear Panel Mounting

Pin Count	A	B	C	D	Pin Count	A	B	C	D
9	14.3	10.2	7	6.3	37	32.2	28.1	7	6.3
15	18.2	14.1	7	6.3	51	30.86	26.9	8.1	7.4
21	22	17.9	7	6.3	66	37.3	33.4	8.1	7.4
25	24.5	20.5	7	6.3	74	33.5	29.4	9.3	8.6
31	28.3	24.3	7	6.3	100	45.7	37	9.3	8.6

Remark: 1. R04JS is sealing product, we suggest using non-through threaded mounting hole for front panel mounting.
2. All dimensions are in mm.

Sunkye International Co., Limited. Email: sales@sunkye.com Tel: 00852-69486797 Fax: 00852-31828508
Version Code 2021

R04J Series Crimping Connectors - Mounting Hole Dimensions

■ **Suitable For Product:** R04J-*PI/RH-Q R04J-*PI/RHG-Q R04JC-*RH-Q

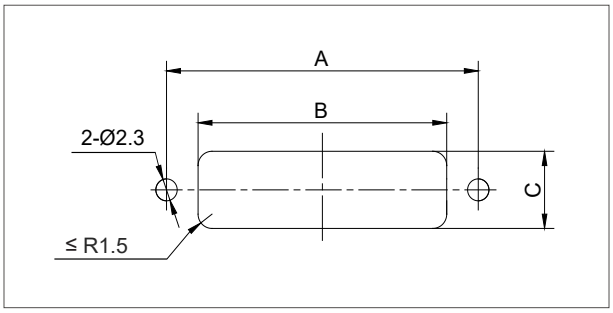

Mounting Hole Dimensions For Front Panel Mounting

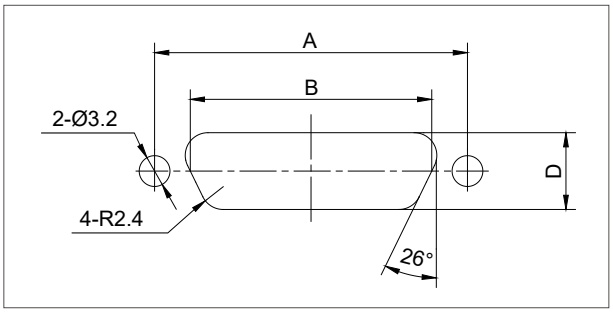

Mounting Hole Dimensions For Rear Panel Mounting

Pin Count	A	B	C	D	Pin Count	A	B	C	D
9	21	10.2	7	6.3	37	38.9	28.1	7	6.3
15	24.9	14.1	7	6.3	51	37.6	26.9	8.1	7.4
21	28.7	17.9	7	6.3	66	44	33.4	8.1	7.4
25	31.2	20.5	7	6.3	74	40.2	29.4	9.3	8.6
31	35	24.3	7	6.3	100	52.4	37	9.3	8.6

■ **Suitable For Product:** R04J-*PI/RH-Q8

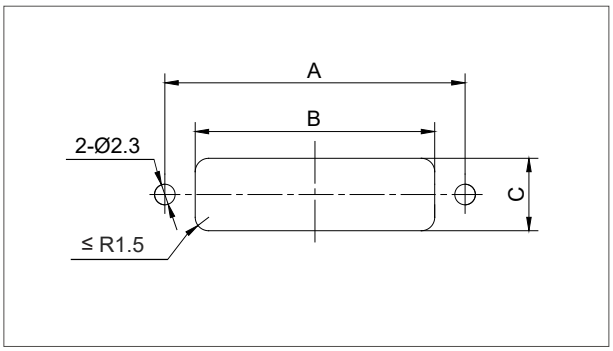

Mounting Hole Dimensions For Front Panel Mounting

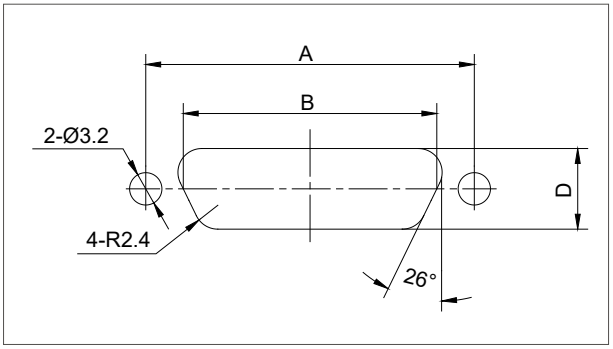

Mounting Hole Dimensions For Rear Panel Mounting

Pin Count	A	B	C	D	Pin Count	A	B	C	D
9	16.1	12	7	6.3	31	30.1	26.1	7	6.3
15	20	15.9	7	6.3	37	34	29.9	7	6.3
21	23.8	19.7	7	6.3	51	32.6	28.7	8.1	7.4
25	26.3	22.3	7	6.3					

Remark: All dimensions are in mm.

R04J Series Crimping Connectors - Mounting Hole Dimensions

■ **Suitable For Product:** R04J-*PI/RH-A1 R04J-*PI/RH-A1D R04J-*PI/RHG-A1
R04J-*PI/RH-A1(9.6) R04J-*PI/RHG-A1(11.6) R04J-*PI/RH-A1D(11.6)

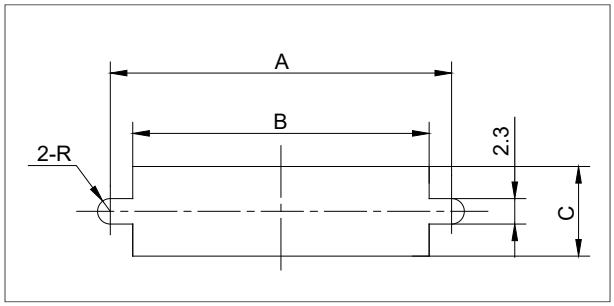

Mounting Hole Dimensions For Front Panel Mounting

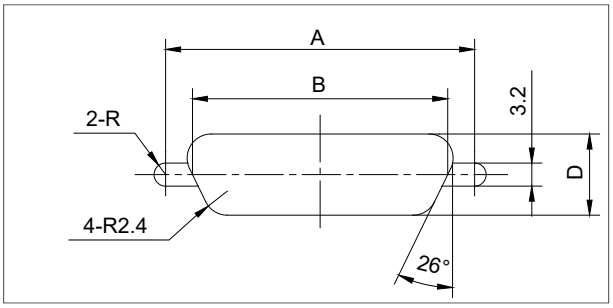

Mounting Hole Dimensions For Rear Panel Mounting

Pin Count	A	B	C	D	Pin Count	A	B	C	D
9	14.3	10.2	8.2	6.3	37	32.2	28.1	8.2	6.3
15	18.2	14.1	8.2	6.3	51	30.86	26.9	9.2	7.4
21	22	17.9	8.2	6.3	66	37.3	33.4	9.2	7.4
25	24.5	20.5	8.2	6.3	74	33.5	29.4	11.2	8.6
31	28.3	24.3	8.2	6.3	100	45.7	37	11.2	8.6

■ **Suitable For Product:** R04J-*PI/RH-A2Q8

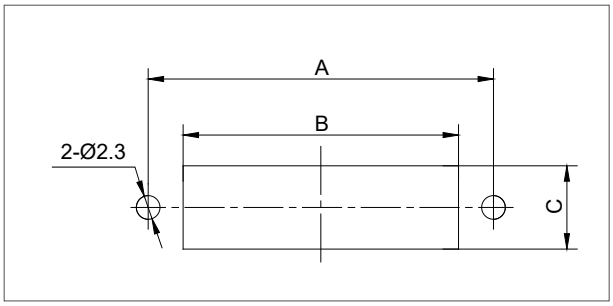

Mounting Hole Dimensions For Front Panel Mounting

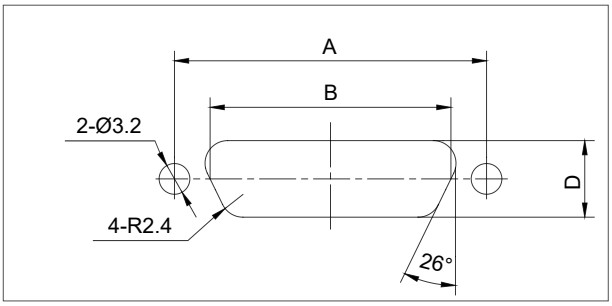

Mounting Hole Dimensions For Rear Panel Mounting

Pin Count	A	B	C	D	Pin Count	A	B	C	D
9	16.1	10.2	8.2	6.3	31	30.1	24.3	8.2	6.3
15	20	14.1	8.2	6.3	37	34	28.1	8.2	6.3
21	23.8	17.9	8.2	6.3	51	32.6	26.9	9.2	7.4
25	26.3	20.5	8.2	6.3					

Remark: All dimensions are in mm.

Sunkye International Co., Limited. Email: sales@sunkye.com Tel: 00852-69486797 Fax: 00852-31828508
Version Code 2021

R04J Series Crimping Connectors - Mounting Hole Dimensions

■ Suitable For Product: R04JA-*RH

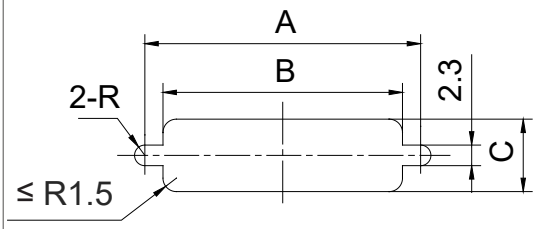

Mounting Hole Dimensions For Front Panel Mounting

Pin Count	A	B	C	Pin Count	A	B	C
9	18.6	10.2	7	37	36.6	28.1	7
15	22.6	14.1	7	51	35.3	26.9	8.1
21	26.3	17.9	7	74	37.8	29.4	9.3
25	28.9	20.5	7	100	45.3	37	9.3
31	32.7	24.3	7				

■ Suitable For Product: R04J-*PI/RH-C

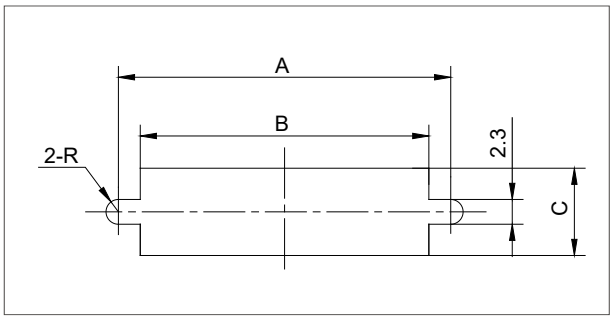

Mounting Hole Dimensions For Front Panel Mounting

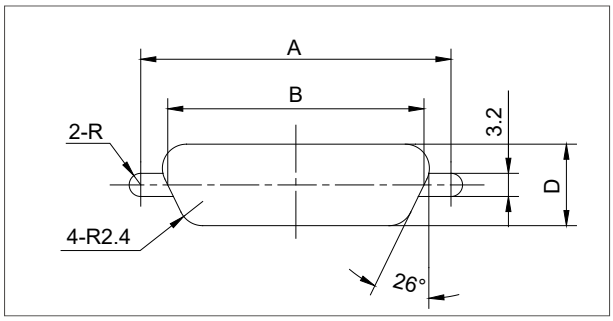

Mounting Hole Dimensions For Rear Panel Mounting

Pin Count	A	B	C	D	Pin Count	A	B	C	D
9	14.3	10.2	8.2	6.3	37	32.2	28.1	8.2	6.3
15	18.2	14.1	8.2	6.3	51	30.86	26.9	9.3	7.4
21	22	17.9	8.2	6.3	66	37.3	33.4	9.3	7.4
25	24.5	20.5	8.2	6.3	74	33.5	29.4	10.3	8.6
31	28.3	24.3	8.2	6.3	100	45.7	37	10.3	8.6

Remark: All dimensions are in mm.

MIL-DTL-83513 Micro-D Connectors

R04J Series Straight to PCB Connectors

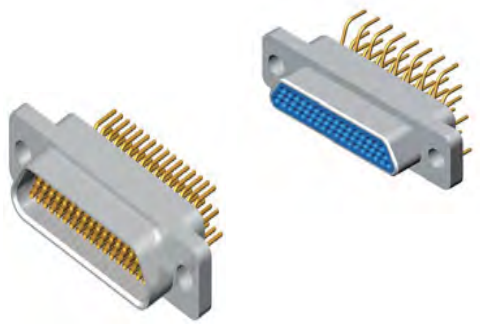

Brief Introduction

- Micro-D Connectors
- Twist Pin Contacts, High Density
- Metal Shell, Nickel or Cadmium Plating
- Straight to PCB Connectors
- Meets MIL-DTL-83513

Specifications

■Environment Temperature:	-55℃~+125℃
■Vibration:	10Hz~2000Hz,196m/s²
■Random Vibration:	Power spectrum density 0.4G²/Hz root mean square value of total acceleration 23.1G
■Shock:	735m/s² 11sm
■Rated Current:	3A
■Contact Resistance:	≤10mΩ
■Insulation Resistance:	≥5000MΩ
■Dielectric Strength:	800V
■Durability:	500 times

Contact Arrangements

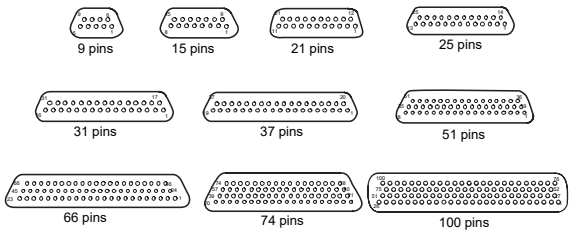

How To Order

Sample Part Number	R04J	-25	PI	S	4	Q5	G	-J

Series:
R04J—Standard Type
R04JA—Fast Lock Type

Contact Number:
9, 15, 21, 25, 31, 37, 51, 66, 74, 100pins

Contact Type :
PI—Pin in Plug RH—Socket in Receptacle

Tail Termination Type:
S—Straight to PCB

Tail Length :
3—6.7mm 4—7.2mm
8—8mm No Code—Standard Type

Locking Hardware Type:
Q5—Locking Hardware Type (See page 20) No Code—No Locking Hardware

Shell Material and Finish :
G—Aluminum Shell, Cadmium Plating No Code—Aluminum Shell, Nickel Plating

PCB Layout :
J—1.27*2.54mm No Code—2.54*2.54mm

Sunkye International Co., Limited. Email: sales@sunkye.com Tel: 00852-69486797 Fax: 00852-31828508
Version Code 2021

Free End Locking Hardware For R04J Series Straight To PCB Connectors

Type	A	B	Outline Dimensions	Assembly Picture	Matched with Locking Hardware
W	M2-6h	7.1	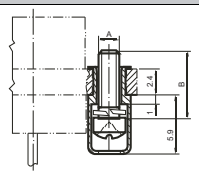	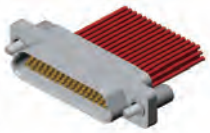	Q,Q0,Q2,Q3,Q4,Q5,Q7,Q8,Q9,Q10,Q11, Q14,Q15,Q17,Q23,Q25,Q29,Q32,Q35, Q36,Q37,Q41,Q42,Q43,Q45,Q46
W8	#2-56UNC-2A	7.1			Q1
W7	M2-6h	7.1	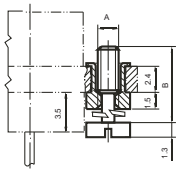	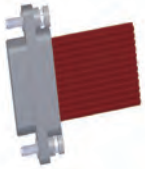	Q,Q0,Q2,Q3,Q4,Q5,Q7,Q8,Q9,Q10,Q11, Q14,Q15,Q17,Q23,Q25,Q29,Q32,Q35, Q36,Q37,Q41,Q42,Q43,Q45,Q46
N	M2-6h		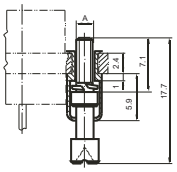	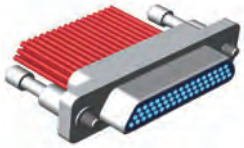	Q,Q0,Q2,Q3,Q4,Q5,Q7,Q8,Q9,Q10,Q11, Q14,Q15,Q17,Q23,Q25,Q29,Q32,Q35, Q36,Q37,Q41,Q42,Q43,Q45,Q46
N1	#2-56UNC-2A				Q1

Fixed End Locking Hardware For R04J Series Straight To PCB Connectors

Type	A	B	C	PCB Thickness	Outline Dimensions	Assembly Picture	Matched with Locking Hardware
Q5	5.7	5.9	18.6	1.6~2.5	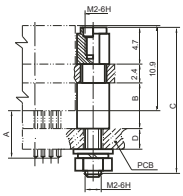		W, W7, W9, N Note: Use with front panel mounting straight to PCB connectors
Q10	8	8.4	20.5	1.6~2.5			
Q25	5.7	5.9	20.5	1.6~2.5			
	8	5.9	20.5	1.6~2.5			
Q23	5.7	5.9	17.8	1.6			
Q32	2.7	2		1.6~2.5	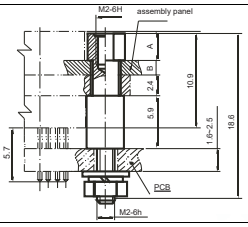		W, W7, W9, N Note: Use with rear panel mounting straight to PCB connectors
Q41	3.2	1.5		1.6~2.5			
Q17	5.7			1.6~3	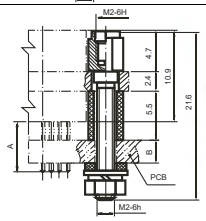		W, W7, W9, N
	7.2			1.6~4.5			
V				≤2.5	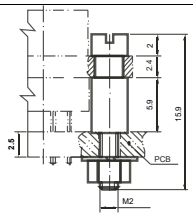		Note: No need to lock with free end locking hardware

Remark:1. Fixed end locking hardware apply to fix the connectors on the mounting panels or the PCB. Most fixed end locking hardware can be mated with free end locking hardware, but a little can not. (eg. V)
2. All dimensions are in mm.

R04J Series Straight To PCB Connectors - Basic Type

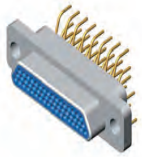

Plug:PIS

Receptacle:RHS

- **Shell Plating:** Nickel or Cadmium
- **PCB Layout:** 2.54*2.54mm
- **Contacts:**
  R04J- 9, 15, 21, 25, 31, 37, 51, 66PIS/RHS

Outline Dimensions

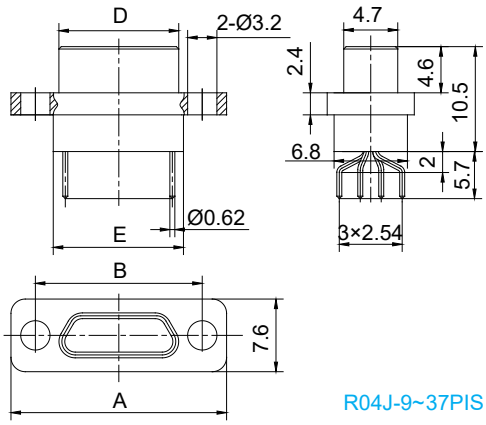

R04J-9~37PIS

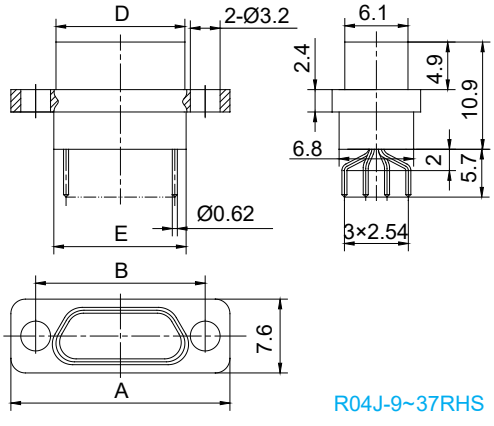

R04J-9~37RHS

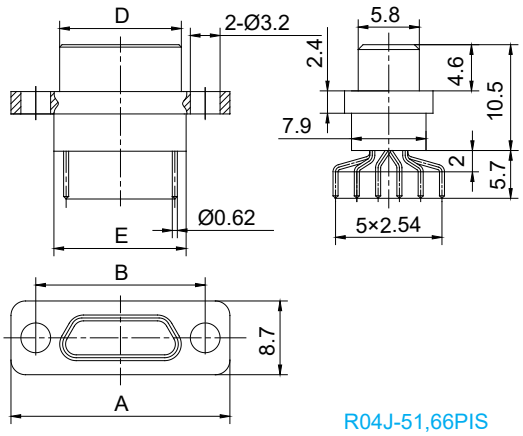

R04J-51,66PIS

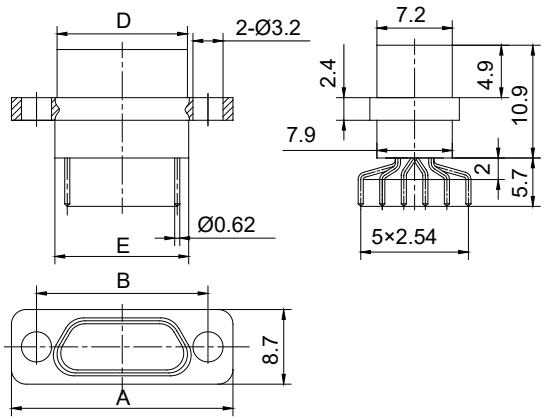

R04J-51,66RHS

Part Number	A	B	D		E
			PIS	RHS	
R04J-9PIS/RHS	19.6	14.3	8.3	9.8	9.9
R04J-15PIS/RHS	23.5	18.2	12.3	13.7	13.8
R04J-21PIS/RHS	27.4	22	16	17.4	17.6
R04J-25PIS/RHS	29.8	24.5	18.6	20	20.2
R04J-31PIS/RHS	33.6	28.3	22.4	23.8	24
R04J-37PIS/RHS	37.4	32.2	26.3	27.7	27.8
R04J-51PIS/RHS	36.4	30.86	25	26.5	26.6
R04J-66PIS/RHS	42.9	37.3	31.4	32.9	33

Remark: All dimensions are in mm.

Sunkye International Co., Limited. Email: sales@sunkye.com Tel: 00852-69486797 Fax: 00852-31828508
Version Code 2021

R04J Series Straight To PCB Connectors - Type J

Plug:PIS-J

Receptacle:RHS-J

- **Shell Plating:** Nickel or Cadmium
- **PCB Layout:** 1.27*2.54mm
- **Contacts:**
  R04J- 9, 15, 21, 25, 31, 37, 51, 66, 74, 100PI/RHS-J

Outline Dimensions

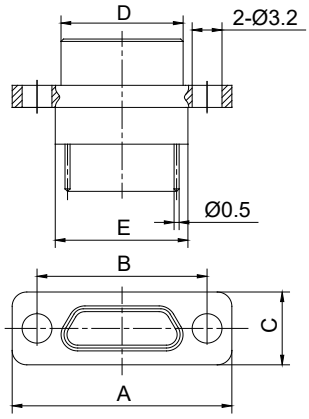

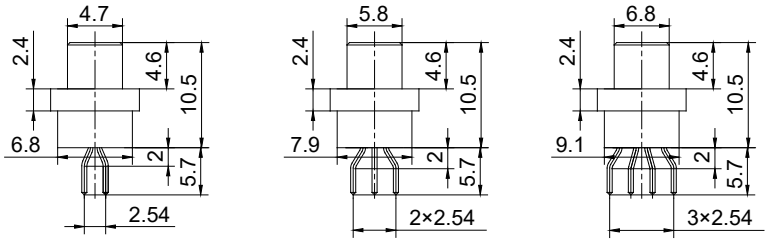

R04J-9~37PIS-J R04J-51,66PIS-J R04J-74,100PIS-J

R04J-9~100PIS-J

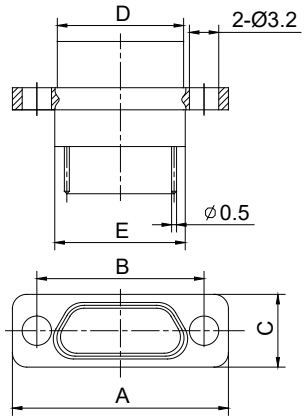

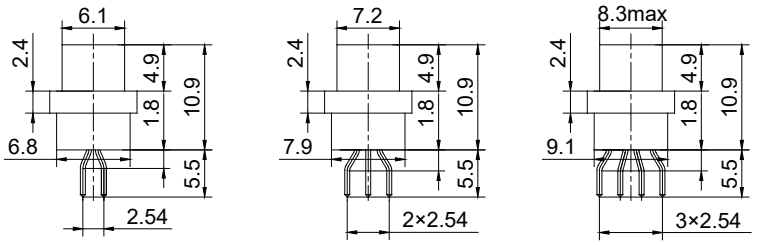

R04J-9~37RHS-J R04J-51,66RHS-J R04J-74,100RHS-J

R04J-9~100RHS-J

Part number	A	B	C	D		E
				PIS-J	RHS-J	
R04J-9PI/RHS-J	19.6	14.3	7.6	8.3	9.8	9.9
R04J-15PI/RHS-J	23.5	18.2	7.6	12.3	13.7	13.8
R04J-21PI/RHS-J	27.4	22	7.6	16	17.4	17.6
R04J-25PI/RHS-J	29.8	24.5	7.6	18.6	20	20.2
R04J-31PI/RHS-J	33.6	28.3	7.6	22.4	23.8	24
R04J-37PI/RHS-J	37.4	32.2	7.6	26.3	27.7	27.8
R04J-51PI/RHS-J	36.4	30.86	8.7	25	26.5	26.6
R04J-66PI/RHS-J	42.9	37.3	8.7	31.4	32.9	33
R04J-74PI/RHS-J	38.8	33.5	9.7	27.5	29	29.1
R04J-100PI/RHS-J	54.7	45.7	9.7	35	36.6	36.6

Remark: All dimensions are in mm.

R04J Series Straight To PCB Connectors Basic Type--PCB Tail Length

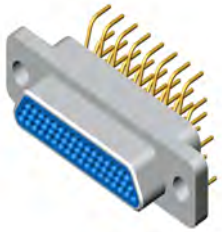

Plug: PIS3/S4/S8

Receptacle: RHS3/S4/S8

- **Shell Plating:** Nickel or Cadmium
- **PCB Layout:** 2.54*2.54mm
- **Contacts:**
  R04J- 9, 15, 21, 25, 31, 37, 51PIS4/S8
  R04J- 9, 15, 21, 25, 31, 37, 51RHS3/S4
- **PCB Tail Length:** 6.7mm, 7.2mm, 8mm

Outline Dimensions

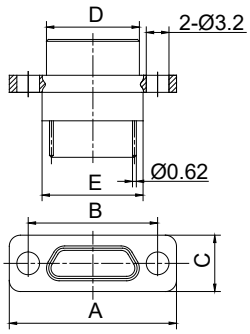

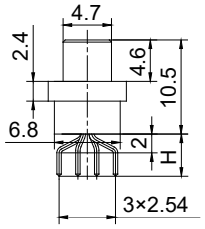

R04J-9~37PIS4/S8

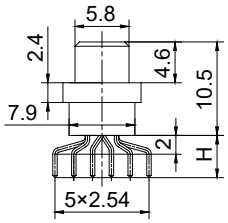

R04J-51PIS4/S8

R04J-9~51PIS4/S8

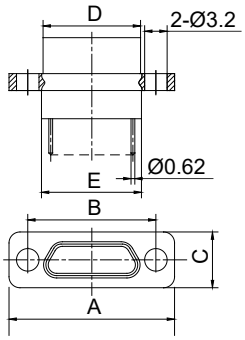

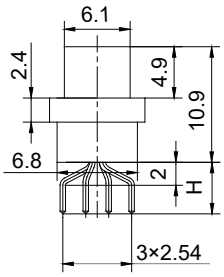

R04J-9~37RHS3/S4

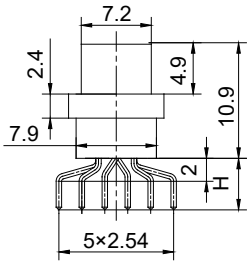

R04J-51RHS3/S4

R04J-9~51RHS3/S4

Pin Count	A	B	C	D	E	H		
						S3	S4	S8
9	19.6	14.3	7.6	8.3	9.9	6.7	7.2	8
15	23.5	18.2	7.6	12.3	13.8	6.7	7.2	8
21	27.4	22	7.6	16	17.6	6.7	7.2	8
25	29.8	24.5	7.6	18.6	20.2	6.7	7.2	8
31	33.6	28.3	7.6	22.4	24	6.7	7.2	8
37	37.4	32.2	7.6	26.3	27.8	6.7	7.2	8
51	36.4	30.86	8.7	25	26.6	6.7	7.2	Without

Remark: All dimensions are in mm.

Sunkye International Co., Limited. Email: sales@sunkye.com Tel: 00852-69486797 Fax: 00852-31828508
Version Code 2021

R04J Series Straight To PCB Connectors Type J--PCB Tail Length

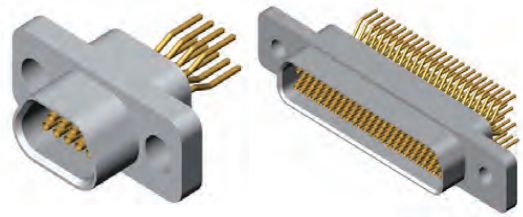

Receptacle: RHS4-J

- **Shell Plating:** Nickel or Cadmium
- **PCB Layout:** 1.27*2.54mm
- **PCB Tail Length**: 7.2mm
- Receptacle Connectors
- **Contact:**
  R04J-9, 15, 21, 25, 31, 37, 51, 66, 74, 100RHS4-J

Outline Dimensions

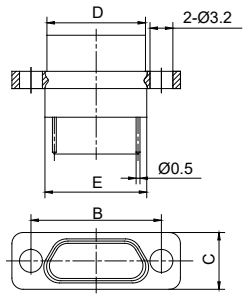

R04J-9~100RHS4-J

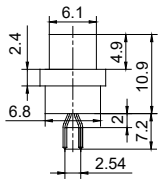

R04J-9~37RHS4-J

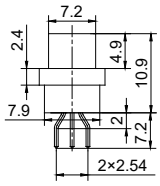

R04J-51,66RHS4-J

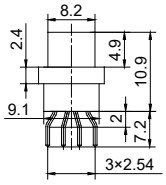

R04J-74,100RHS4-J

Part Number	A	B	C	D	E
R04J-9RHS4-J	19.6	14.3	7.6	9.8	9.9
R04J-15RHS4-J	23.5	18.2	7.6	13.7	13.8
R04J-21RHS4-J	27.4	22	7.6	17.4	17.6
R04J-25RHS4-J	29.8	24.5	7.6	20	20.2
R04J-31RHS4-J	33.6	28.3	7.6	23.8	24
R04J-37RHS4-J	37.4	32.2	7.6	27.7	27.8
R04J-51RHS4-J	36.4	30.86	8.7	26.5	26.6
R04J-66RHS4-J	42.9	37.3	8.7	32.9	33
R04J-74RHS4-J	38.8	33.5	9.7	29	29.1
R04J-100RHS4-J	54.7	45.7	9.7	36.6	36.6

R04J Series Straight To PCB Connectors - Fast Lock Type R04JA

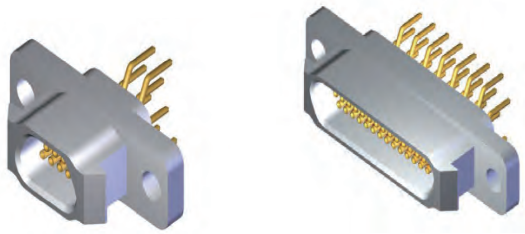

- **Shell Plating:** Nickel or Cadmium
- **PCB Layout:** 2.54*2.54mm
- With Fast Lock Function
- Receptacle Connectors
- **Contacts:**
  R04JA- 9, 15, 21, 25, 31, 37, 51RHS

Outline Dimensions

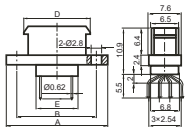

R04JA-9~37RHS

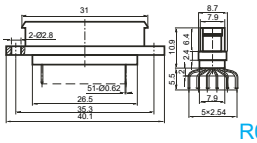

R04JA-51RHS

Part Number	A	B	D	E
R04JA-9RHS	23.4	18.6	14.8	9.8
R04JA-15RHS	27.4	22.6	18.3	13.8
R04JA-21RHS	31.1	26.3	22	17.5
R04JA-25RHS	33.7	28.9	24.6	20.1
R04JA-31RHS	37.5	32.7	28.4	24.1
R04JA-37RHS	41.4	36.6	32.3	27.8

Remark: All dimensions are in mm.

R04J Series Straight to PCB Connectors Basic Type--PCB Layout

- Patterns Shown are for Connectors Mounting Side of PC Board
- PCB Layout: 2.54*2.54mm
- Plug Connectors: R04J-9~66PIS/S4/S8

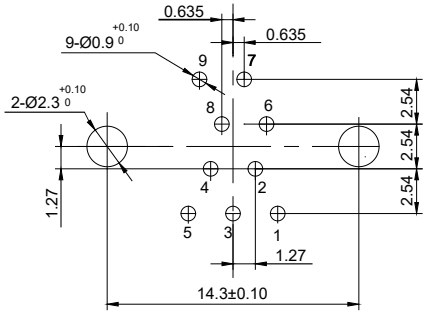

R04J-9PIS/S4/S8

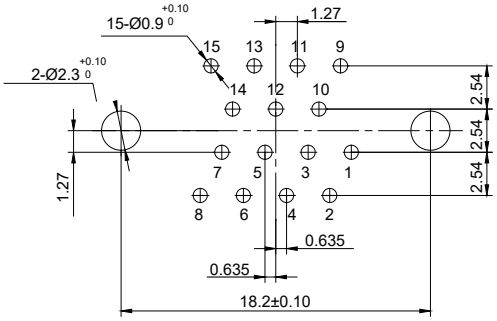

R04J-15PIS/S4/S8

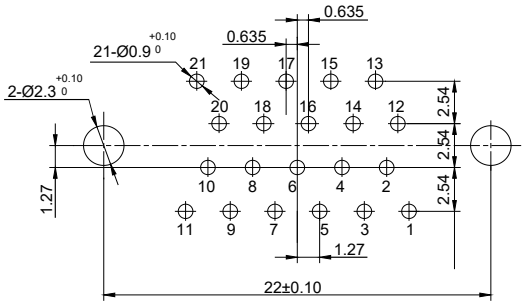

R04J-21PIS/S4/S8

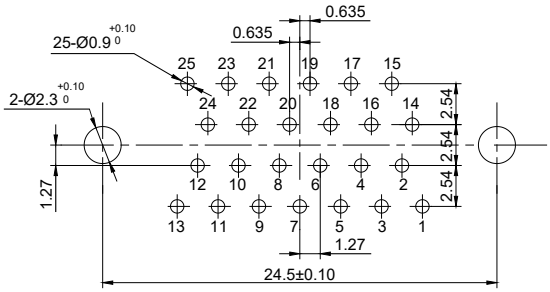

R04J-25PIS/S4/S8

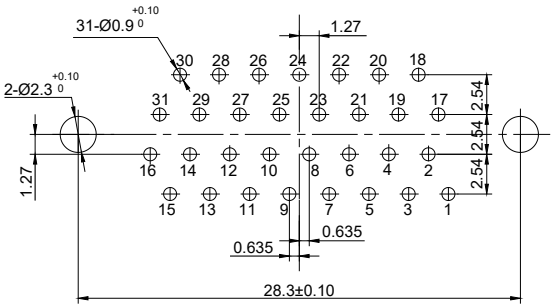

R04J-31PIS/S4/S8

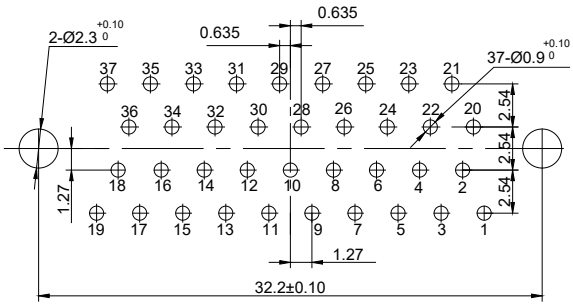

R04J-37PIS/S4/S8

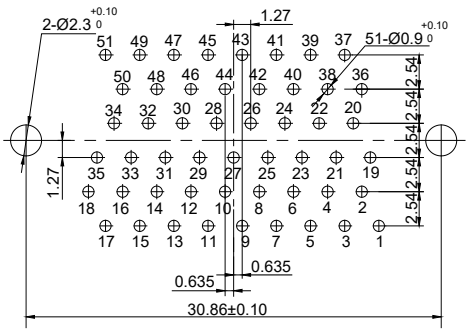

R04J-51PIS/S4/S8

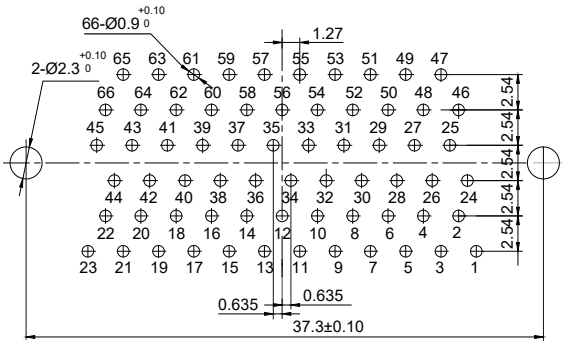

R04J-66PIS/S4/S8

Remark: All dimensions are in mm.

Sunkye International Co., Limited. Email: sales@sunkye.com Tel: 00852-69486797 Fax: 00852-31828508
Version Code 2021

R04J Series Straight to PCB Connectors Basic Type--PCB Layout

- Patterns Shown are for Connectors Mounting Side of PC Board
- PCB Layout: 2.54*2.54mm
- Receptacle Connectors: R04J-9~66RHS/S3/S4

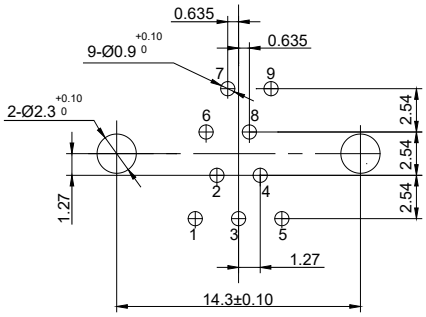

R04J-9RHS/S3/S4

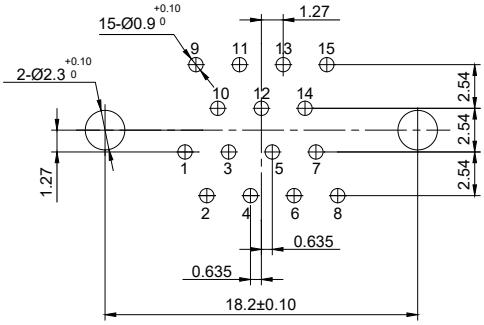

R04J-15RHS/S3/S4

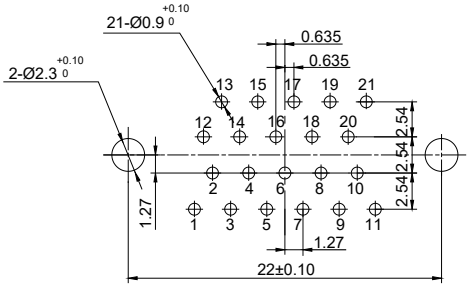

R04J-21RHS/S3/S4

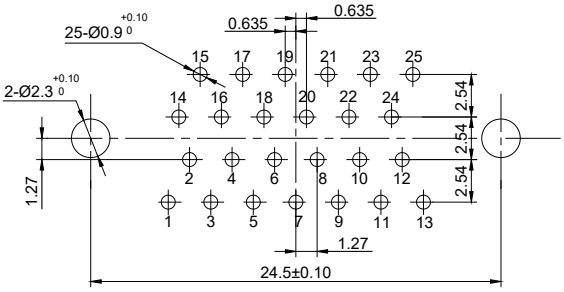

R04J-25RHS/S3/S4

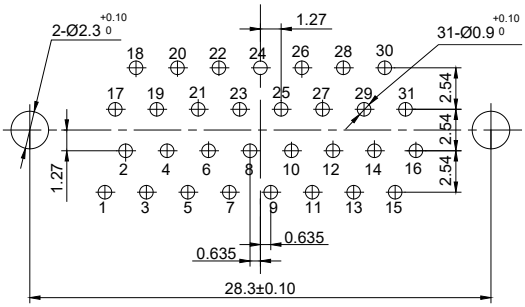

R04J-31RHS/S3/S4

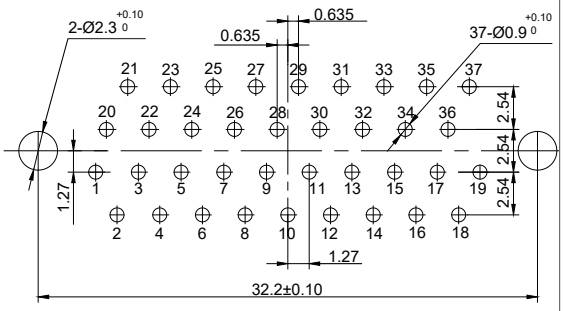

R04J-37RHS/S3/S4

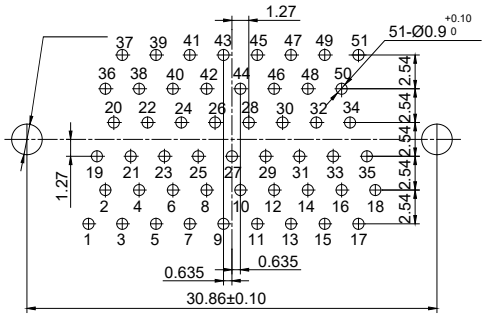

R04J-51RHS/S3/S4

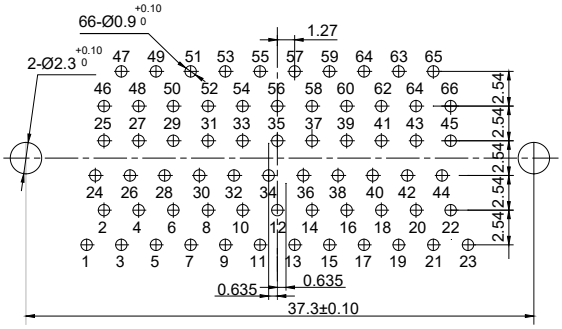

R04J-66RHS/S3/S4

Remark: All dimensions are in mm.

R04J Series Straight to PCB Connectors Type J--PCB Layout

- Patterns Shown are for Connectors Mounting Side of PC Board
- PCB Layout: 1.27*2.54mm
- Plug Connectors: R04J-9~100PIS-J

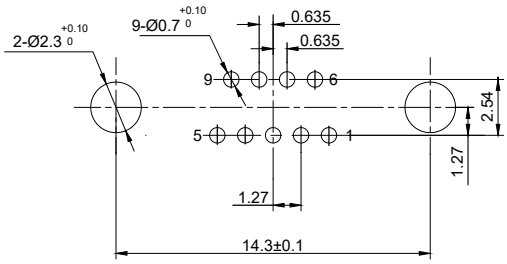

R04J-9PIS-J

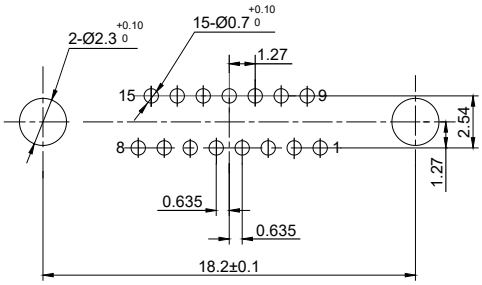

R04J-15PIS-J

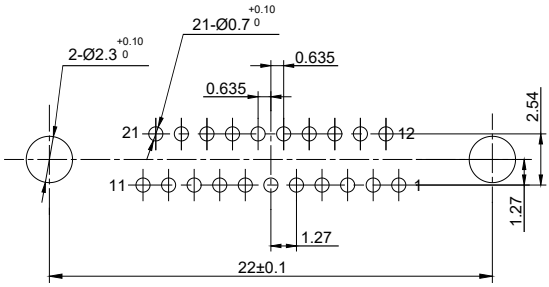

R04J-21PIS-J

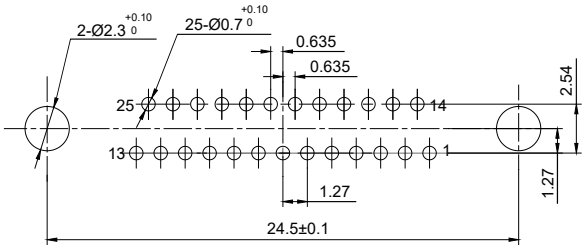

R04J-25PIS-J

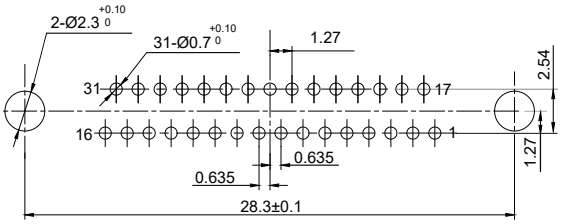

R04J-31PIS-J

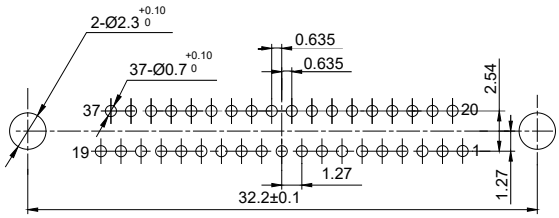

R04J-37PIS-J

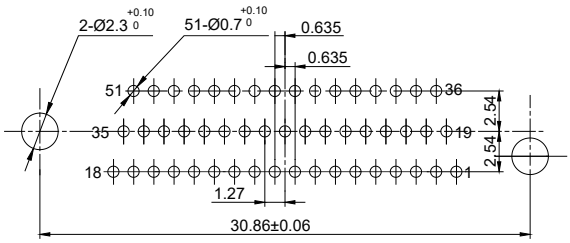

R04J-51PIS-J

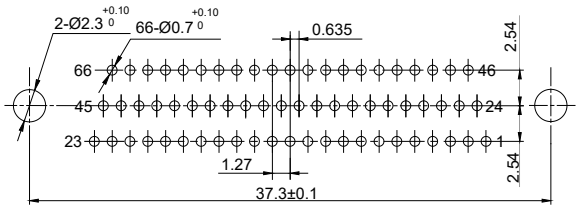

R04J-66PIS-J

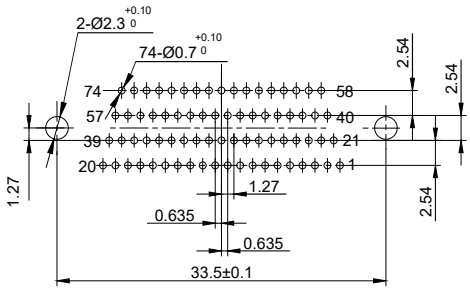

R04J-74PIS-J

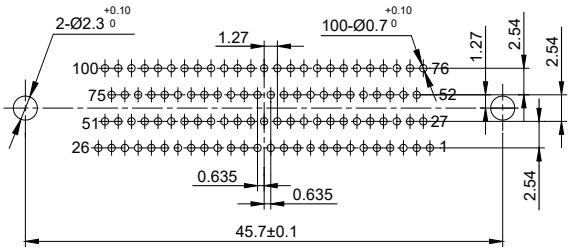

R04J-100PIS-J

Remark: All dimensions are in mm.

Sunkye International Co., Limited. Email: sales@sunkye.com Tel: 00852-69486797 Fax: 00852-31828508
Version Code 2021

R04J Series Straight to PCB Connectors Type J--PCB Layout

- Patterns Shown are for Connectors Mounting Side of PC Board
- PCB Layout: 1.27*2.54mm
- Receptacle Connectors: R04J-9~100RHS/S4-J

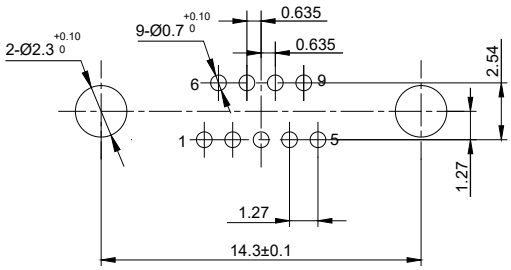

R04J-9RHS-J, RHS4-J

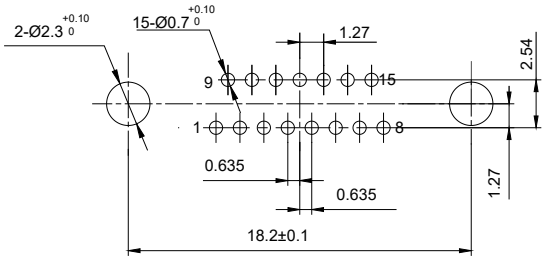

R04J-15RHS-J, RHS4-J

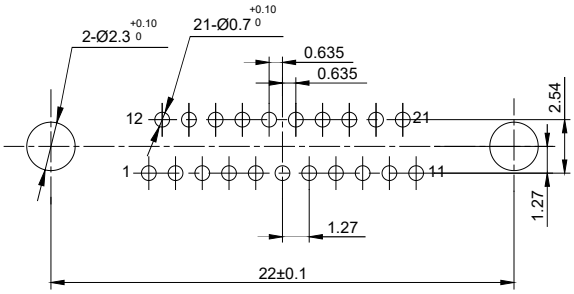

R04J-21RHS-J, RHS4-J

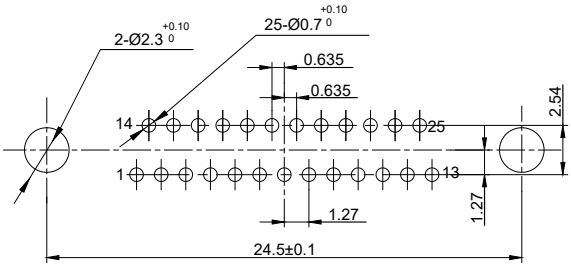

R04J-25RHS-J, RHS4-J

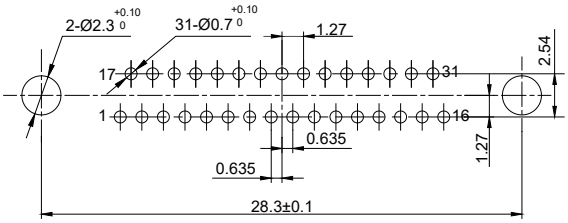

R04J-31RHS-J, RHS4-J

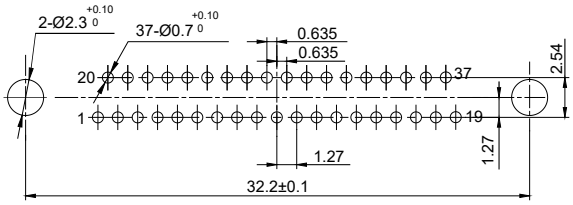

R04J-37RHS-J, RHS4-J

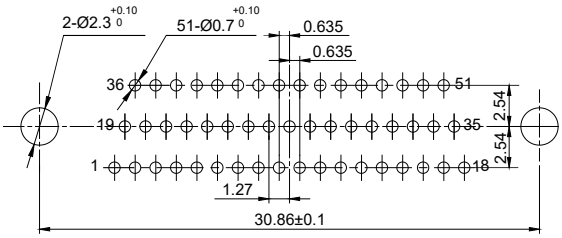

R04J-51RHS-J, RHS4-J

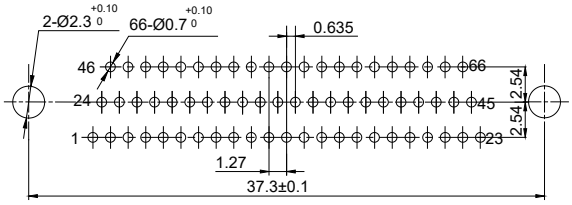

R04J-66RHS-J, RHS4-J

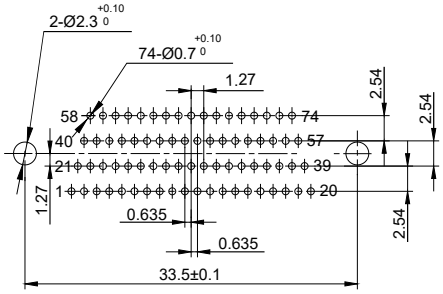

R04J-74RHS-J, RHS4-J

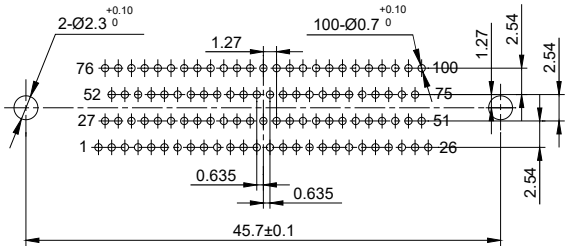

R04J-100RHS-J, RHS4-J

Remark: All dimensions are in mm.

R04J Series Straight to PCB Connectors Fast lock Type R04JA--PCB Layout

- Patterns Shown are for Connectors Mounting Side of PC Board
- PCB Layout: 2.54*2.54mm
- Receptacle Connectors: R04JA-9~51RHS

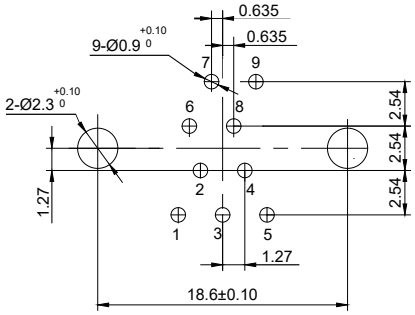

R04JA-9RHS

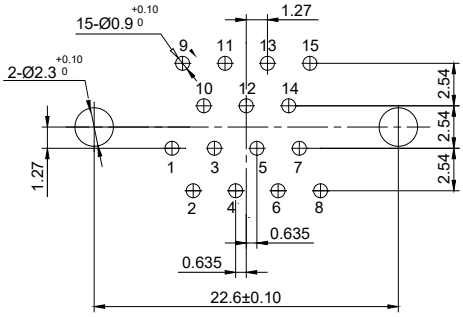

R04JA-15RHS

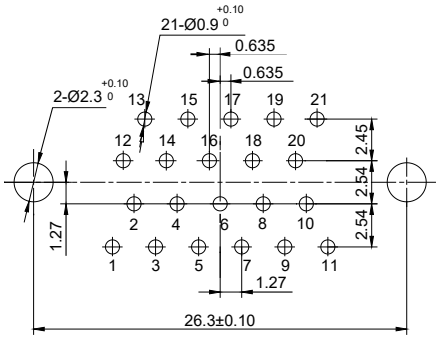

R04JA-21RHS

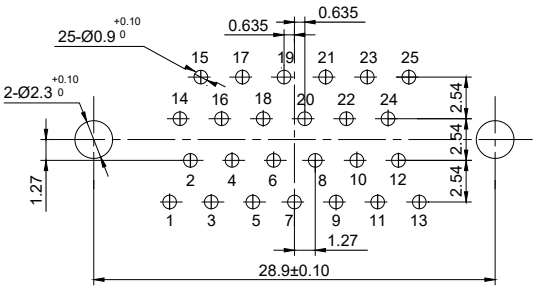

R04JA-25RHS

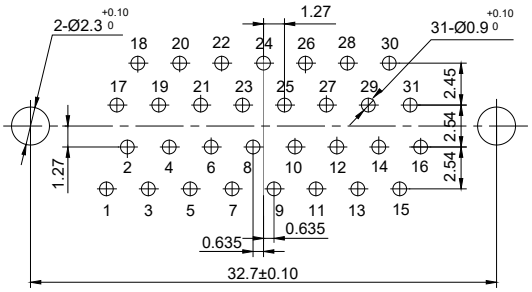

R04JA-31RHS

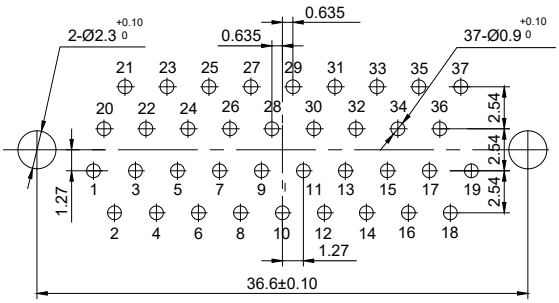

R04JA-37RHS

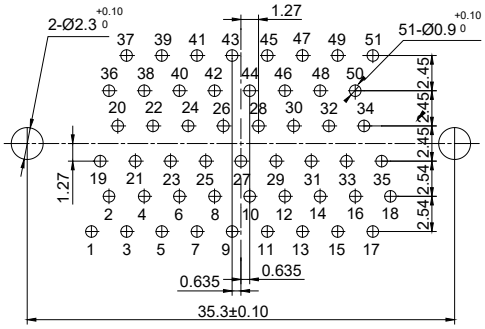

R04JA-51RHS

Remark: All dimensions are in mm.

Sunkye International Co., Limited. Email: sales@sunkye.com Tel: 00852-69486797 Fax: 00852-31828508
Version Code 2021

R04J Series Straight to PCB Connectors Fast lock Type R04JA--PCB Layout

- Patterns Shown are for Connectors Mounting Side of PC Board
- PCB Layout: 1.27*2.54mm
- Receptacle Connectors: R04JA-9~100RHS-J

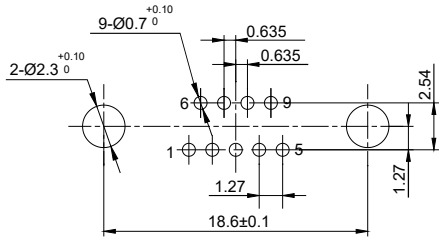

R04JA-9RHS-J

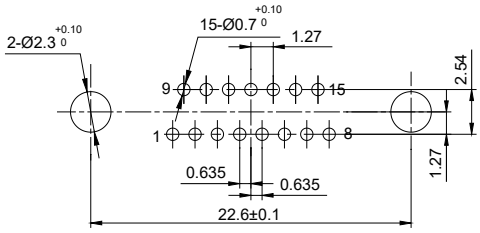

R04JA-15RHS-J

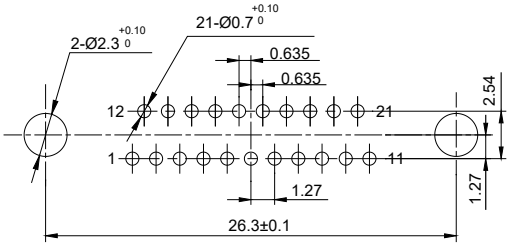

R04JA-21RHS-J

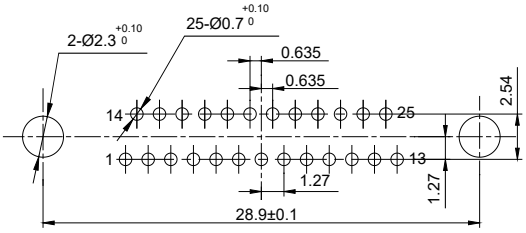

R04JA-25RHS-J

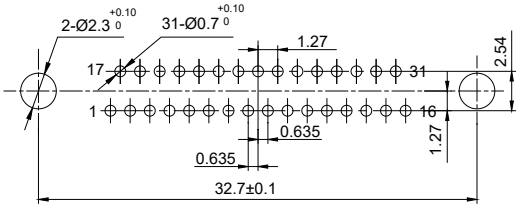

R04JA-31RHS-J

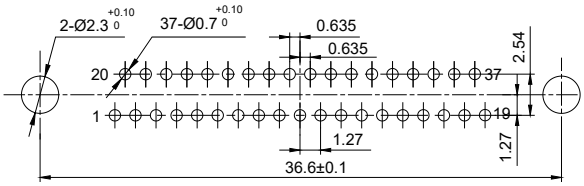

R04JA-37RHS-J

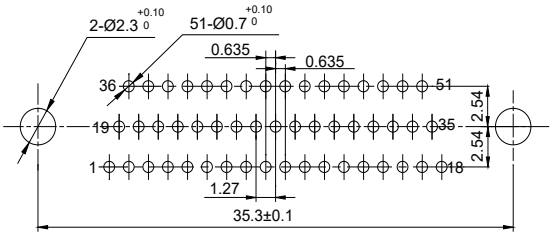

R04JA-51RHS-J

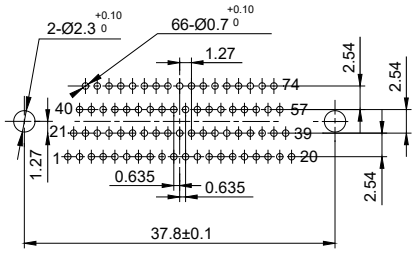

R04JA-74RHS-J

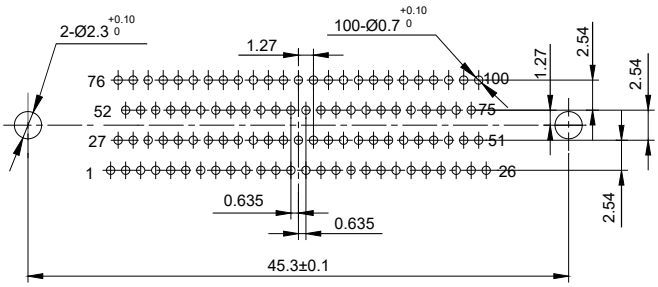

R04JA-100RHS-J

Remark: All dimensions are in mm.

MIL-DTL-83513 Micro-D Connectors

R04J Series Right Angle to PCB Connectors

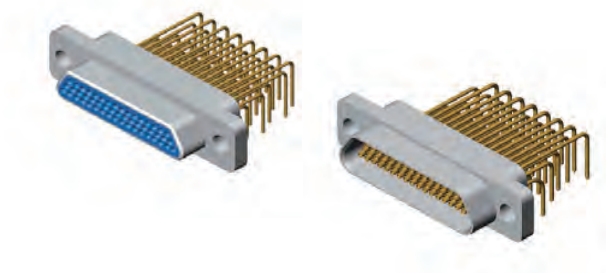

Brief Introduction

- Micro-D Connectors
- Twist Pin Contacts, High Density
- Metal Shell, Nickel or Cadmium Plating
- Right Angle to PCB Connectors
- Meets MIL-DTL-83513

Specifications

■Environment Temperature:	-55℃~+125℃
■Vibration:	10Hz~2000Hz,196m/s²
■Random Vibration:	Power spectrum density 0.4G²/Hz root mean square value of total acceleration 23.1G
■Shock:	735m/s² 11sm
■Rated Current:	3A
■Contact Resistance:	≤10mΩ
■Insulation Resistance:	≥5000MΩ
■Dielectric Strength:	800V
■Durability:	500 times

Contact Arrangements

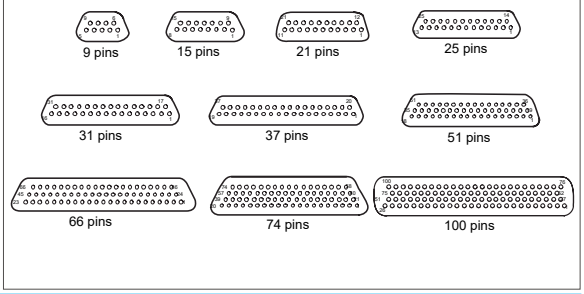

How To Order

Sample Part Number	R04J	-25	PI	F	1	Q7	G	Q	-J

Series:
R04J—Standard Type
R04JA—Fast Lock Type
R04JC—Sn-P Bronze Shell, Nickel Plating

Contact Number:
9, 15, 21, 25, 31, 37, 51, 66, 74, 100pins

Contact Type :
PI—Pin in Plug RH—Socket in Receptacle

Tail Termination Type:
F—90° Right Angle to PCB

Tail Length:
1—3.0mm 2—5.5mm

Locking Hardware Type:
Q7—Locking Hardware (See page 2) No Code—No Locking Hardware

Shell Material and Finish :
G—Aluminum Shell, Cadmium Plating No Code—Aluminum Shell, Nickel Plating

Extended Series :
No Code—Standard Type
Q—Widened Flange
Q8—The Sizes of Flange and Assembly Hole are Enlarged

PCB layout :
J—1.27*2.54mm No Code—2.54*2.54mm

Sunkye International Co., Limited. Email: sales@sunkye.com Tel: 00852-69486797 Fax: 00852-31828508
Version Code 2021

Free End Locking Hardware For R04J Series Right Angle To PCB Connectors

Type	A	B	Outline Dimensions	Assembly Picture	Matched with Locking Hardware
W	M2-6h	7.1	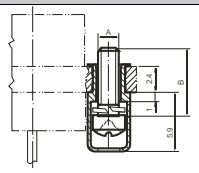	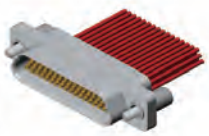	Q,Q0,Q2,Q3,Q4,Q5,Q7,Q8,Q9,Q10,Q11, Q14,Q15,Q17,Q23,Q25,Q29,Q32,Q35, Q36,Q37,Q41,Q42,Q43,Q45,Q46
W8	#2-56UNC-2A	7.1			Q1
W7	M2-6h	7.1	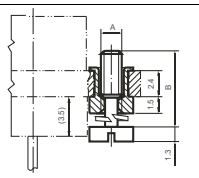	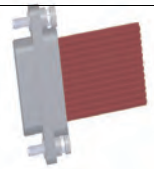	Q,Q0,Q2,Q3,Q4,Q5,Q7,Q8,Q9,Q10,Q11, Q14,Q15,Q17,Q23,Q25,Q29,Q32,Q35, Q36,Q37,Q41,Q42,Q43,Q45,Q46
N	M2-6h		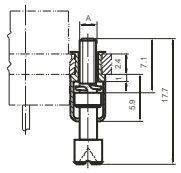	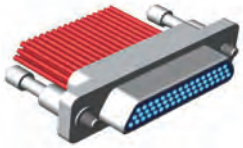	Q,Q0,Q2,Q3,Q4,Q5,Q7,Q8,Q9,Q10,Q11, Q14,Q15,Q17,Q23,Q25,Q29,Q32,Q35, Q36,Q37,Q41,Q42,Q43,Q45,Q46
N1	#2-56UNC-2A				Q1

Fixed End Locking Hardware For R04J Series Right Angle To PCB Connectors

Type	Pin Count	A	B	C	D	E	Outline Dimensions	Assembly Picture	Matched with Locking Hardware
Q2	9~37	4.2	7.6	11.6	3.7	1	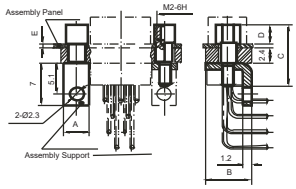	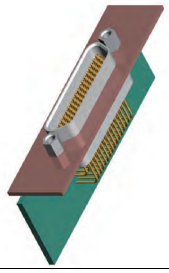	W, W7, W9, N Note: Use with rear panel mounting right angle to PCB connectors
	51	4.2	8.7	11.6	3.7	1			
	74	4.2	9.7	11.6	3.7	1			
	100	8.8	9.7	11.6	3.7	1			
Q14	9~37	4.2	7.6	10.7	1.7	3			
	51	4.2	8.7	10.7	1.7	3			
	74	4.2	9.7	10.7	1.7	3			
	100	8.8	9.7	10.7	1.7	3			
Q7	9~37	4.2	7.6	10.7			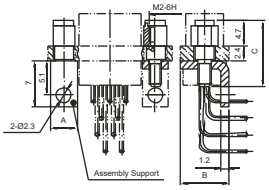	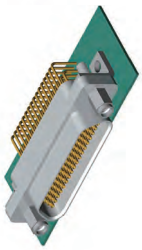	W, W7, W9, N Note: Use with front panel mounting right angle to PCB connectors
	51	4.2	8.7	10.7					
	74	4.2	9.7	10.7					
	100	8.8	9.7	10.7					
Q42	9~37	4.2	7.6	9.7					
	51	4.2	8.7	9.7					
	74	4.2	9.7	9.7					
	100	8.8	9.7	9.7					
Q15	9~37	7.6	1.9	2.5	9.7		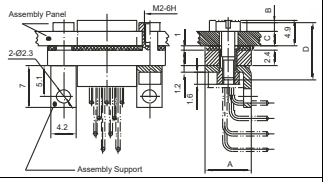	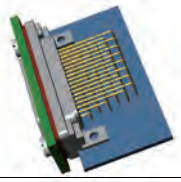	W, W7, W9, N Note: Use with front panel mounting for R04J-9~51PI/ RHF-Q8
	51	8.7	1.9	2.5	9.7				
Q35	9~37	7.6	2.4	1.8	9.5				
	51	8.7	2.4	1.8	9.5				
V1	9~37	4.2	7.6	9.7			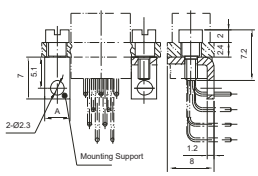		Note: No need to lock with free end locking hardware
	51	4.2	8.7	9.7					
	74	4.2	9.7	9.7					
	100	8.8	9.7	9.7					

Remark:1. Fixed end locking hardware apply to fix the connectors on the mounting panels or the PCB. Most fixed end locking hardware can be mated with free end locking hardware, but a little can not. (eg. V1)
2. All dimensions are in mm.

R04J Series Right Angle To PCB Connectors - Basic Type

Plug:PIF

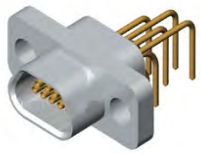

Receptacle:RHF

- **Shell Plating:** Nickel or Cadmium
- **PCB Layout:** 2.54*2.54mm
- **Contacts:**
  R04J- 9, 15, 21, 25, 31, 37, 51, 66PI/RHF

Outline Dimensions

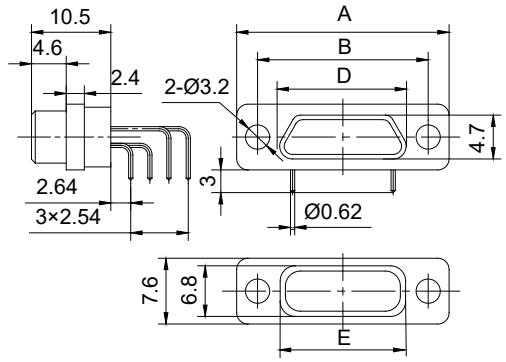

R04J-9~37PIF

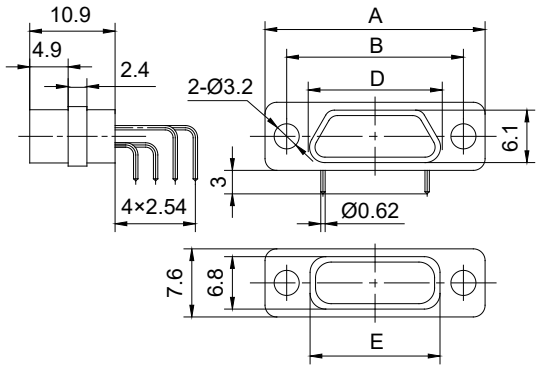

R04J-9~37RHF

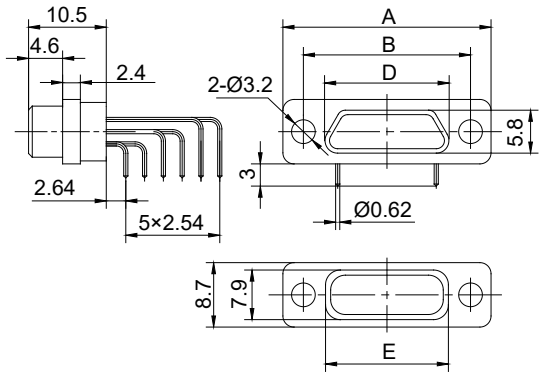

R04J-51,66PIF

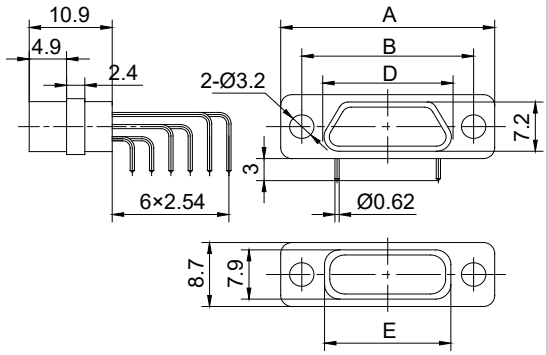

R04J-51,66 RHF

Part Number	A	B	D		E
			PIF	RHF	
R04J-9PI/RHF	19.6	14.3	8.3	9.8	9.9
R04J-15PI/RHF	23.5	18.2	12.3	13.7	13.8
R04J-21PI/RHF	27.4	22	16	17.4	17.6
R04J-25PI/RHF	29.8	24.5	18.6	20	20.2
R04J-31PI/RHF	33.6	28.3	22.4	23.8	24
R04J-37PI/RHF	37.4	32.2	26.3	27.7	27.8
R04J-51PI/RHF	36.4	30.86	25	26.5	26.6
R04J-66PI/RHF	42.9	37.3	31.4	32.9	33

Remark:All dimensions are in mm.

Sunkye International Co., Limited. Email: sales@sunkye.com Tel: 00852-69486797 Fax: 00852-31828508
Version Code 2021

R04J Series Right Angle To PCB Connectors - Type J

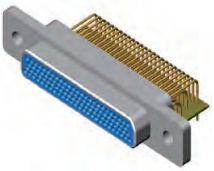

Plug:PIF-J

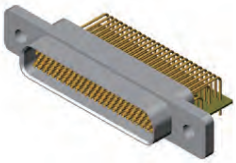

Receptacle:RHF-J

- **Shell Plating:** Nickel or Cadmium
- **PCB Layout:** 1.27*2.54mm
- **Contacts:**
  R04J- 9, 15, 21, 25, 31, 37, 51, 66, 74, 100PI/RHF-J

Outline Dimensions

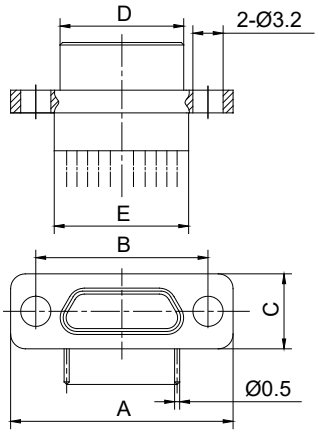

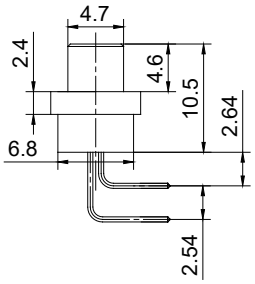

R04J-9~37PIF-J

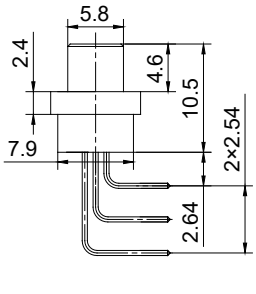

R04J-51,66PIF-J

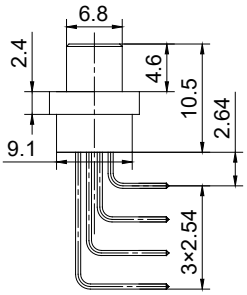

R04J-74,100PIF-J

R04J-9~100PIF-J

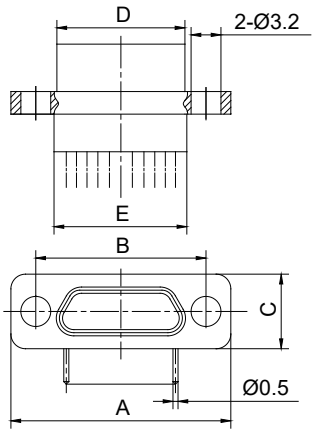

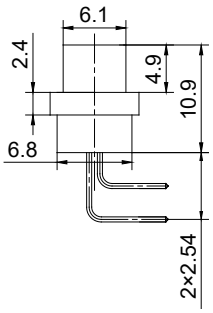

R04J-9~37RHF-J

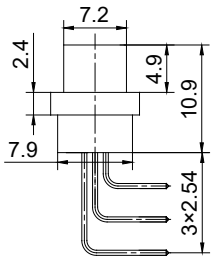

R04J-51,66RHF-J

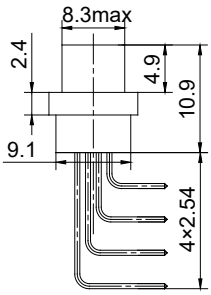

R04J-74,100RHF-J

R04J-9~100RHF-J

Part Number	A	B	C	D		E
				PIF-J	RHF-J	
R04J-9PI/RHF-J	19.6	14.3	7.6	8.3	9.8	9.9
R04J-15PI/RHF-J	23.5	18.2	7.6	12.3	13.7	13.8
R04J-21PI/RHF-J	27.4	22	7.6	16	17.4	17.6
R04J-25PI/RHF-J	29.8	24.5	7.6	18.6	20	20.2
R04J-31PI/RHF-J	33.6	28.3	7.6	22.4	23.8	24
R04J-37PI/RHF-J	37.4	32.2	7.6	26.3	27.7	27.8
R04J-51PI/RHF-J	36.4	30.86	8.7	25	26.5	26.6
R04J-66PI/RHF-J	42.9	37.3	8.7	31.4	32.9	33
R04J-74PI/RHF-J	38.8	33.5	9.7	27.5	29	29.1
R04J-100PI/RHF-J	54.7	45.7	9.7	35	36.6	36.6

Remark:All dimensions are in mm.

R04J Series Right Angle To PCB Connectors - Type Q8

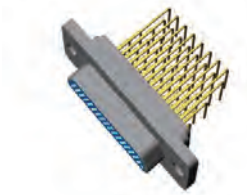

Plug:PIF-Q8

Receptacle:RHF-Q8

- **Shell Plating:** Nickel or Cadmium
- **PCB Layout:** 2.54*2.54mm
- **Contacts:**
  R04J- 9, 15, 21, 25, 31, 37, 51PI/RHF-Q8

Outline Dimensions

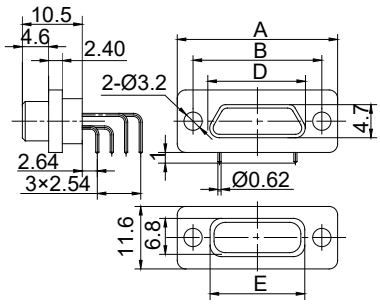

R04J-9~37PIF-Q8

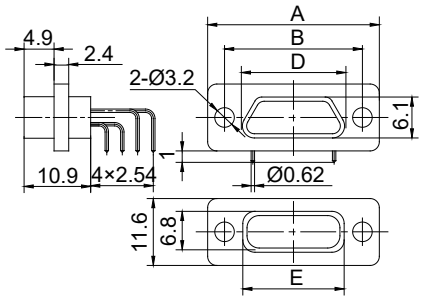

R04J-9~37RHF-Q8

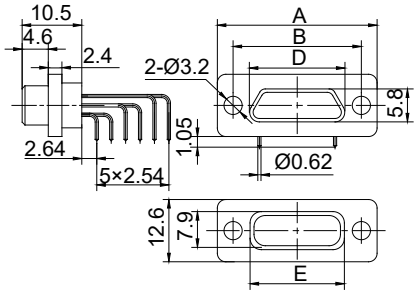

R04J-51PIF-Q8

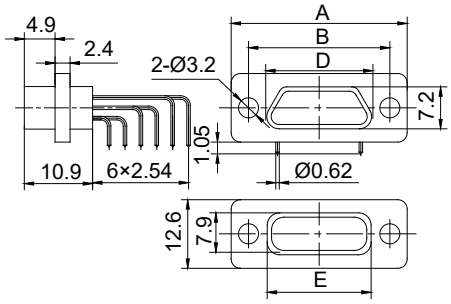

R04J-51RHF-Q8

Part Number	A	B	D		E
			PIF-Q8	RHF-Q8	
R04J-9PI/RHF-Q8	21.4	16.1	8.3	9.8	11.7
R04J-15PI/RHF-Q8	25.3	20	12.3	13.7	15.6
R04J-21PI/RHF-Q8	29.2	23.8	16	17.4	19.4
R04J-25PI/RHF-Q8	31.6	26.3	18.6	20	22
R04J-31PI/RHF-Q8	35.4	30.1	22.4	23.8	25.8
R04J-37PI/RHF-Q8	39.2	34	26.3	27.7	29.6
R04J-51PI/RHF-Q8	38.2	32.6	26.5	26.5	28.4

Remark:All dimensions are in mm.

Sunkye International Co., Limited. Email: sales@sunkye.com Tel: 00852-69486797 Fax: 00852-31828508
Version Code 2021

R04JC Series Right Angle To PCB Connectors - Extend Type Q8

Receptacle:R04JC-*RHF-Q

- Sn-p Outer Shell, Nickel Plating
- **PCB Layout:** 2.54*2.54mm
- **Widen The Flange**
- **Receptacle Connectors**
- **Contacts:**
  R04JC-9, 15, 21, 25, 31, 37, 51, 66RHF-Q

Outline Dimensions

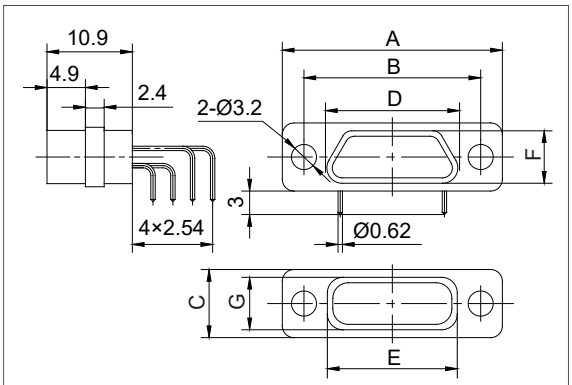

R04JC-9~37RHF-Q

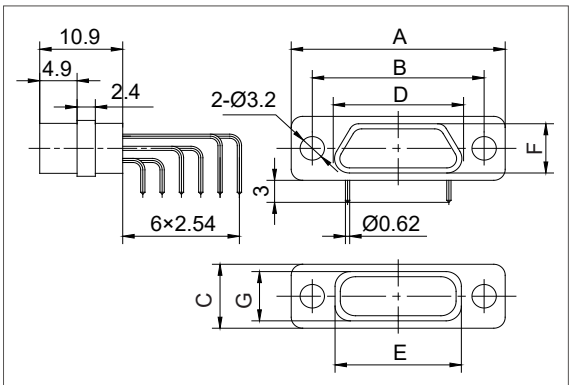

R04JC-51,66RHF-Q

Part Number	A	B	C	D	E	F	G
R04JC-9RHF-Q	26	21	14	9.8	9.9	6.1	6.8
R04JC-15RHF-Q	29.9	24.9	14	13.7	13.8	6.1	6.8
R04JC-21RHF-Q	33.8	28.7	14	17.4	17.6	6.1	6.8
R04JC-25RHF-Q	36.2	31.2	14	20	20.2	6.1	6.8
R04JC-31RHF-Q	40	35	14	23.8	24	6.1	6.8
R04JC-37RHF-Q	43.8	38.9	14	27.7	27.8	6.1	6.8
R04JC-51RHF-Q	42.6	37.6	15.2	26.5	26.6	7.2	7.9
R04JC-66RHF-Q	49.3	44	15.2	32.9	33	7.2	7.9

Remark:All dimensions are in mm.

R04JA Series Right Angle To PCB Connectors - Basic Type

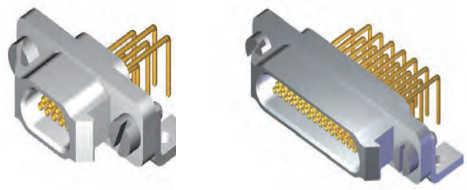

Receptacle:R04JA-*RHF

- With Fast Lock Function
- **Shell Plating:** Nickel or Cadmium
- **PCB Layout:** 2.54*2.54mm
- Receptacle Connectors
- **Contacts:**
  R04JA- 9, 15, 21, 25, 31, 37, 51RHF

Outline Dimensions

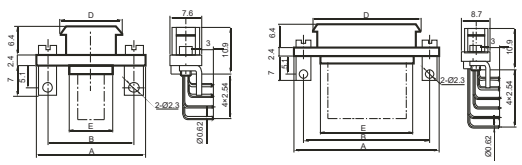

R04JA-9~37RHF R04JA-51RHF

Part Number	A	B	D	E
R04JA-9RHF	23.4	18.6	14.3	9.8
R04JA-15RHF	27.4	22.6	18.3	13.8
R04JA-21RHF	31.1	26.3	22	17.5
R04JA-25RHF	33.7	28.9	24.6	20.1
R04JA-31RHF	37.5	32.7	28.4	24.1
R04JA-37RHF	41.4	36.6	32.3	27.8
R04JA-51RHF	40.1	35.5	31	26.5

R04JA Series Right Angle To PCB Connectors - Type J

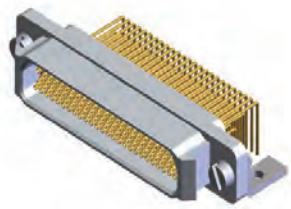

Receptacle:R04JA-*RHF-J

- With Fast Lock Function
- **Shell Plating:** Nickel or Cadmium
- **PCB Layout:** 2.54*2.54mm
- Receptacle Connectors
- **Contacts:**
  R04JA- 9, 15, 21, 25, 31, 37, 51, 66, 74, 100RHF-J

Outline Dimensions

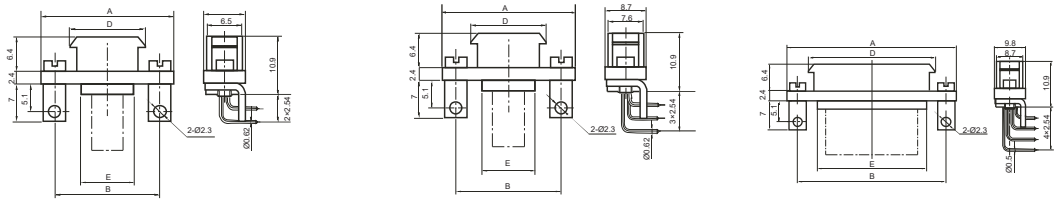

R04JA-9~37RHF-J R04JA-51RHF-J R04JA-74,100RHF-J

Part Number	A	B	D	E
R04JA-9RHF-J	23.4	18.6	14.3	9.8
R04JA-15RHF-J	27.4	22.6	18.3	13.8
R04JA-21RHF-J	31.1	26.3	22	17.5
R04JA-25RHF-J	33.7	28.9	24.6	20.1
R04JA-31RHF-J	37.5	32.7	28.4	24.1
R04JA-37RHF-J	41.4	36.6	32.3	27.8
R04JA-51RHF-J	40.1	35.3	31	26.5
R04JA-74RHF-J	42.6	37.8	33.5	29
R04JA-100RHF-J	50.1	45.3	41	36.5

Remark:All dimensions are in mm.

Sunkye International Co., Limited. Email: sales@sunkye.com Tel: 00852-69486797 Fax: 00852-31828508
Version Code 2021

R04J Series Right Angle to PCB Connectors Basic Type--PCB Layout

- Patterns Shown are for Connectors Mounting Side of PC Board
- PCB Layout: 2.54*2.54mm
- Plug Connectors: R04J-9~66PIF

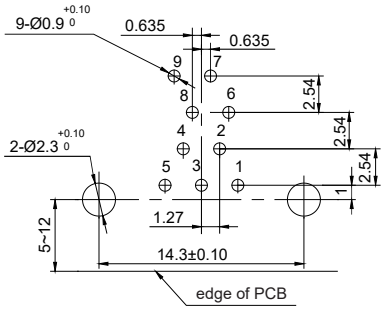

R04J-9PIF

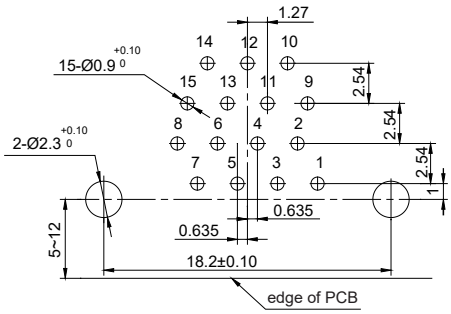

R04J-15PIF

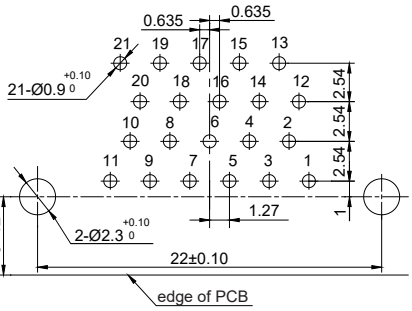

R04J-21PIF

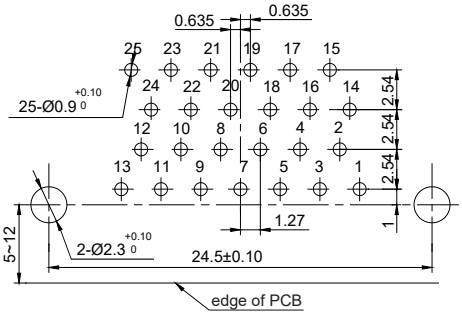

R04J-25PIF

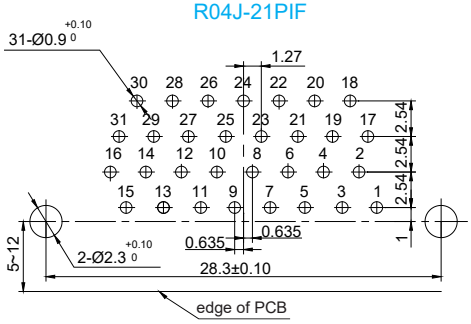

R04J-31PIF

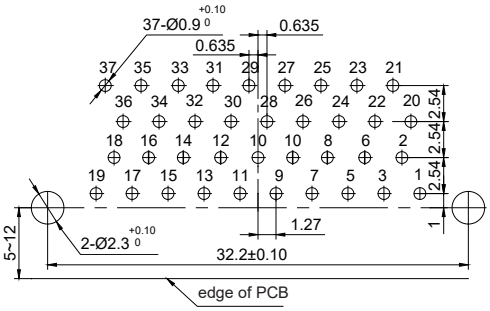

R04J-37PIF

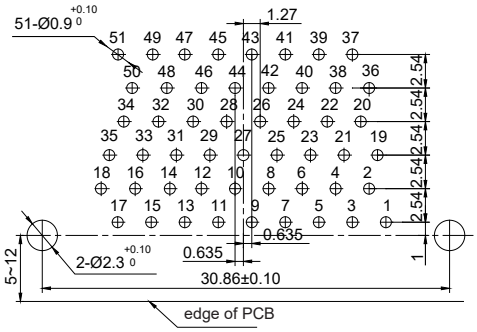

R04J-51PIF

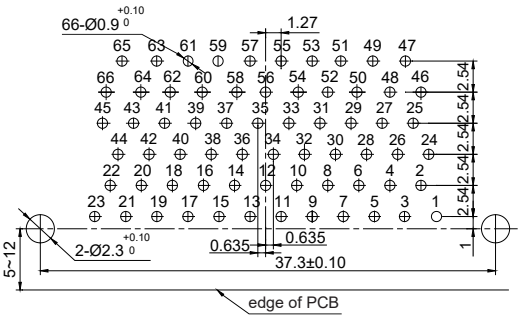

R04J-66PIF

Remark:All dimensions are in mm.

R04J Series Right Angle to PCB Connectors Basic Type--PCB Layout

- Patterns Shown are for Connectors Mounting Side of PC Board
- PCB Layout: 2.54*2.54mm
- Receptacle Connectors: R04J-9~66RHF

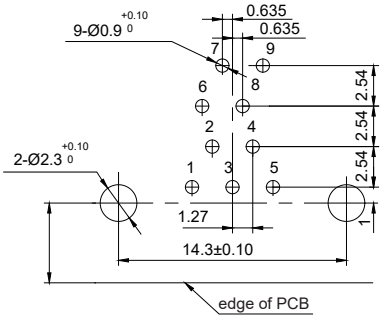

R04J-9RHF

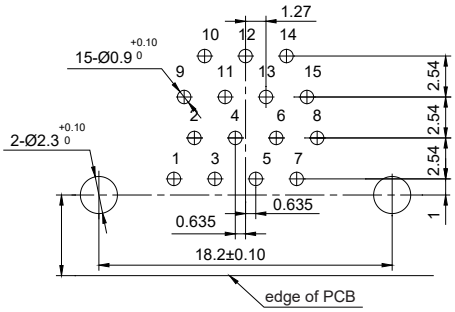

R04J-15RHF

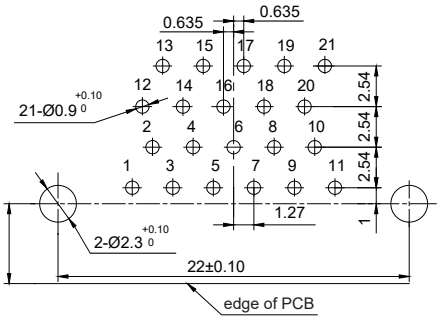

R04J-21RHF

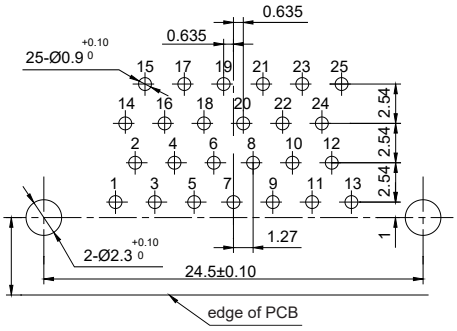

R04J-25RHF

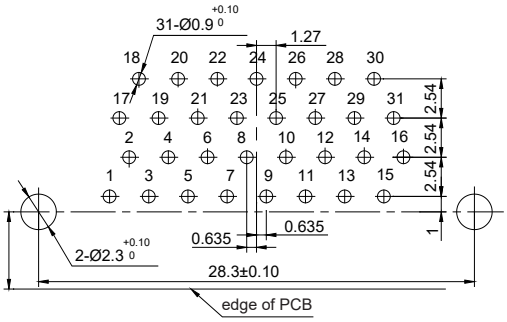

R04J-31RHF

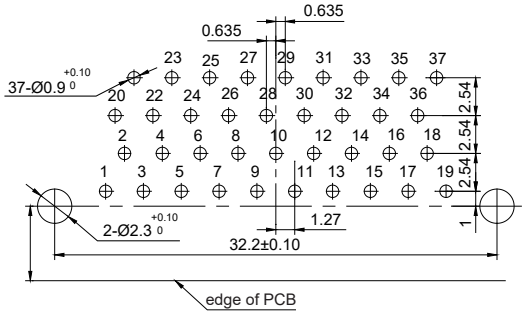

R04J-37RHF

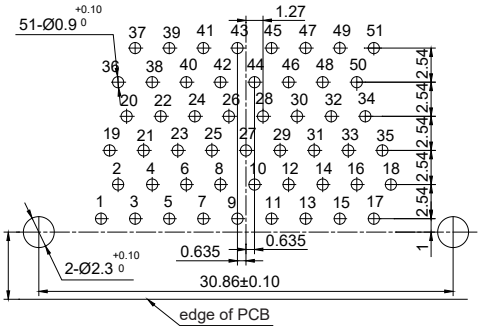

R04J-51RHF

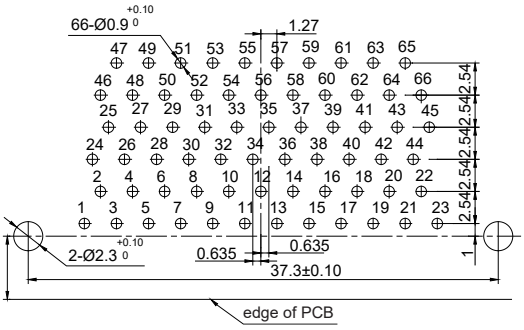

R04J-66RHF

Remark:All dimensions are in mm.

Sunkye International Co., Limited. Email: sales@sunkye.com Tel: 00852-69486797 Fax: 00852-31828508
Version Code 2021

R04J Series Right Angle to PCB Connectors Type J--PCB Layout

- Patterns Shown are for Connectors Mounting Side of PC Board
- PCB Layout: 1.27*2.54mm
- Plug Connectors: R04J-9~100PIF-J

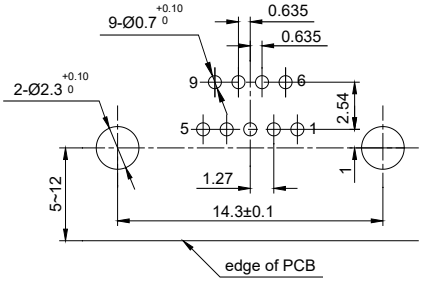

R04J-9PIF-J

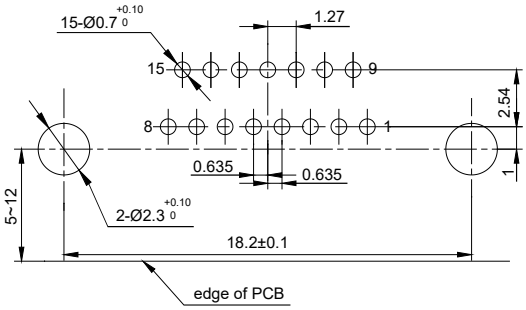

R04J-15PIF-J

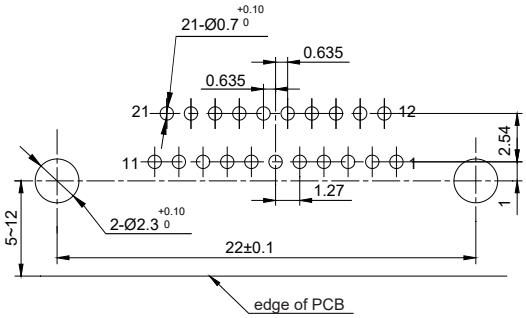

R04J-21PIF-J

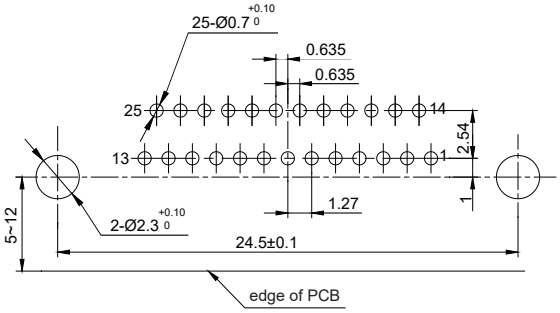

R04J-25PIF-J

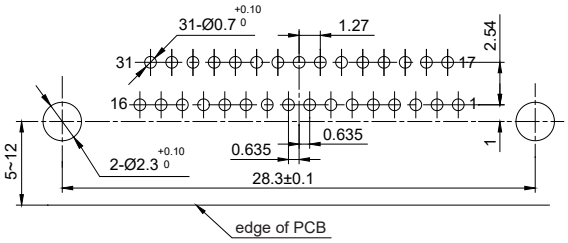

R04J-31PIF-J

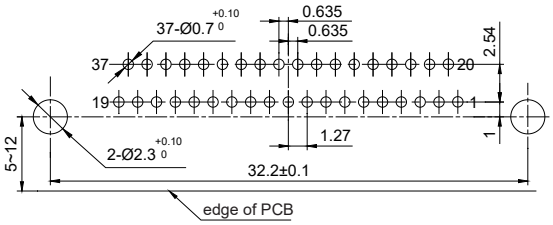

R04J-37PIF-J

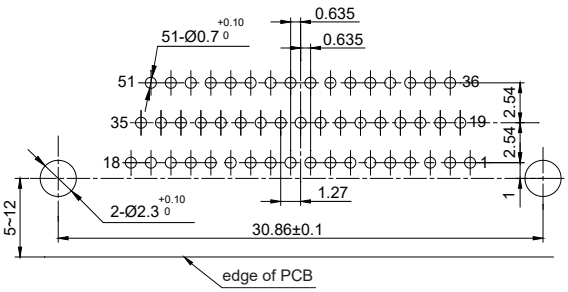

R04J-51PIF-J

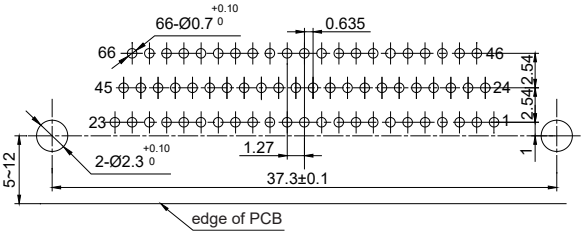

R04J-66PIF-J

Remark:All dimensions are in mm.

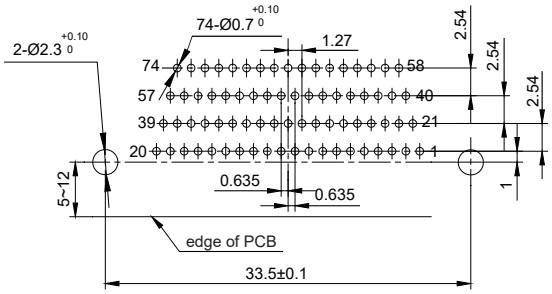

R04J-74PIF-J

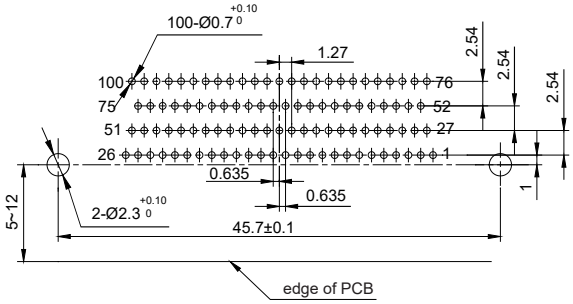

R04J-100PIF-J

R04J Series Right Angle to PCB Connectors Type J--PCB Layout

- Patterns Shown are for Connectors Mounting Side of PC Board
- PCB Layout: 1.27*2.54mm
- Receptacle Connectors: R04J-9~100RHF-J

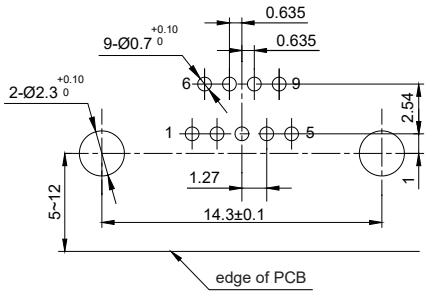

R04J-9RHF-J

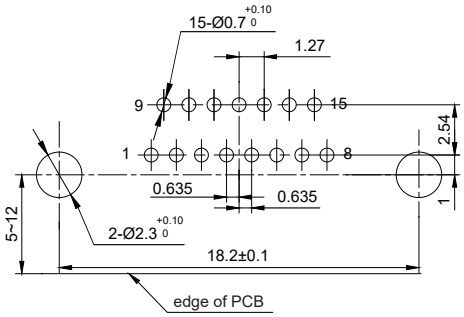

R04J-15RHF-J

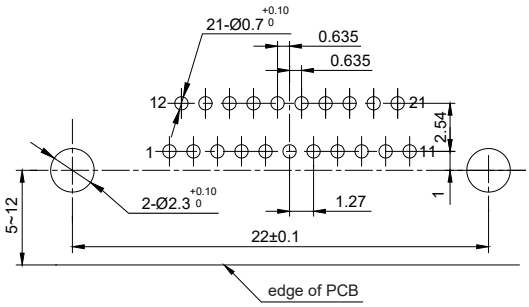

R04J-21RHF-J

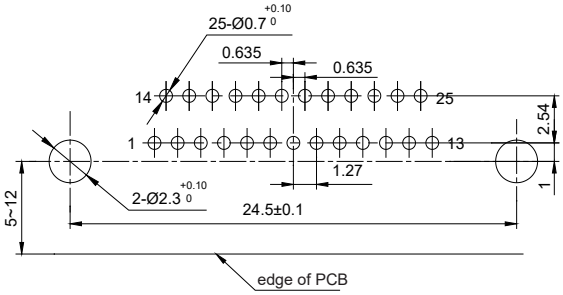

R04J-25RHF-J

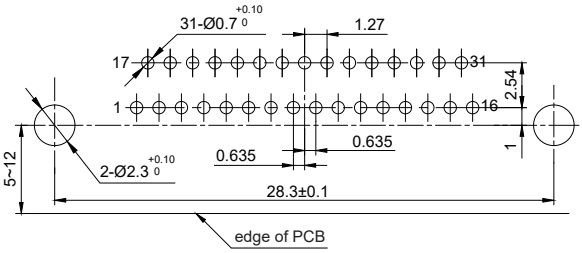

R04J-31RHF-J

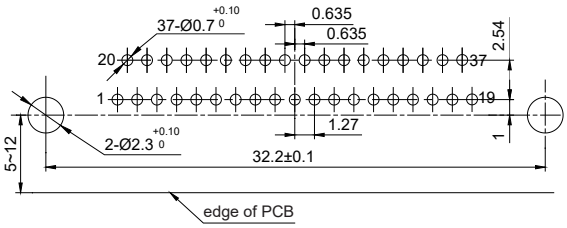

R04J-37RHF-J

Remark:All dimensions are in mm.

Sunkye International Co., Limited. Email: sales@sunkye.com Tel: 00852-69486797 Fax: 00852-31828508
Version Code 2021

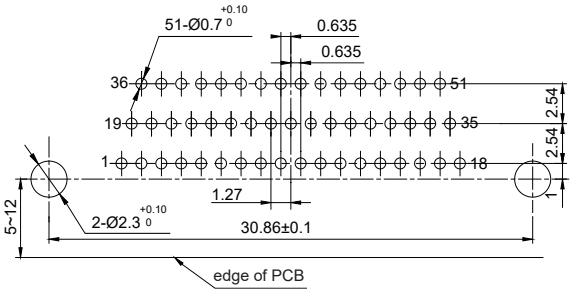

R04J-51RHF-J

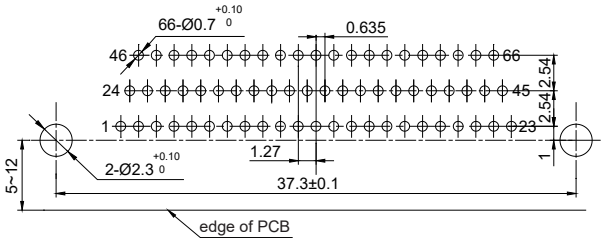

R04J-66RHF-J

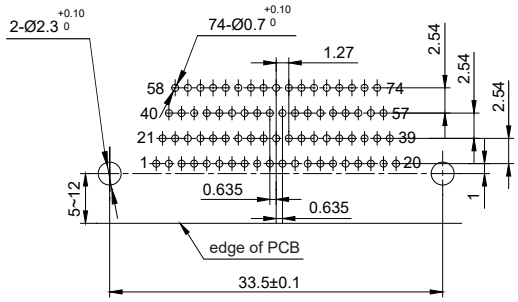

R04J-74RHF-J

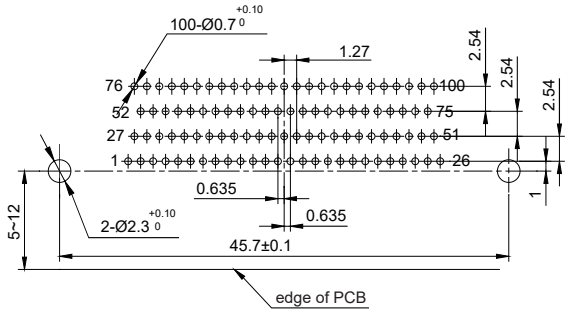

R04J-100RHF-J

R04J Series Right Angle to PCB Connectors Type Q8--PCB Layout

- Patterns Shown are for Connectors Mounting Side of PC Board
- PCB Layout: 2.54*2.54mm
- Plug Connectors: R04J-9~51PIF-Q8

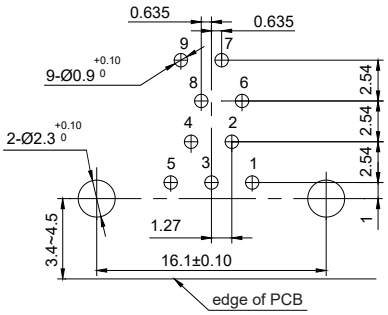

R04J-9PIF-Q8

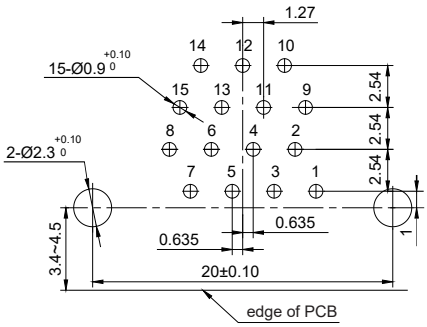

R04J-15PIF-Q8

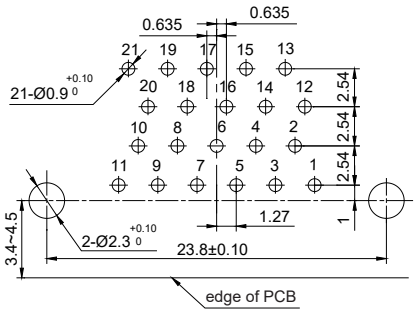

R04J-21PIF-Q8

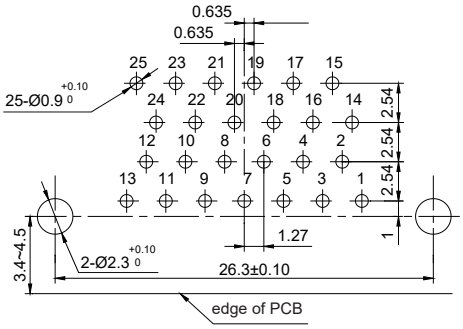

R04J-25PIF-Q8

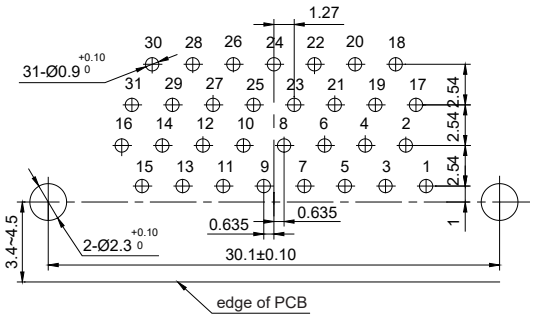

R04J-31PIF-Q8

Remark:All dimensions are in mm.

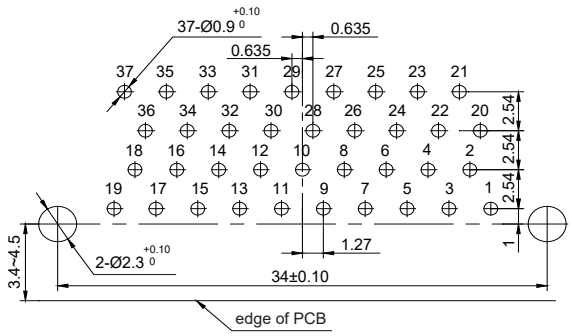

R04J-37PIF-Q8

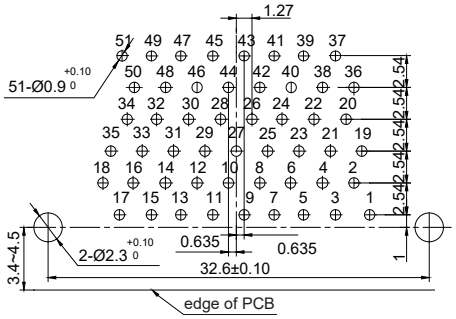

R04J-51PIF-Q8

R04J Series Right Angle to PCB Connectors Type Q8--PCB Layout

- Patterns Shown are for Connectors Mounting Side of PC Board
- PCB Layout: 2.54*2.54mm
- Receptacle Connectors: R04J-9~51RHF-Q8

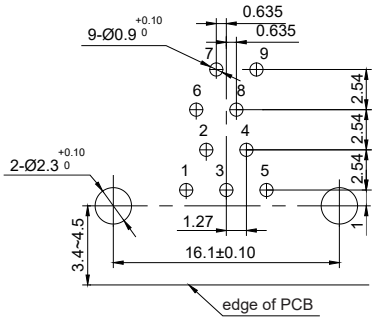

R04J-9RHF-Q8

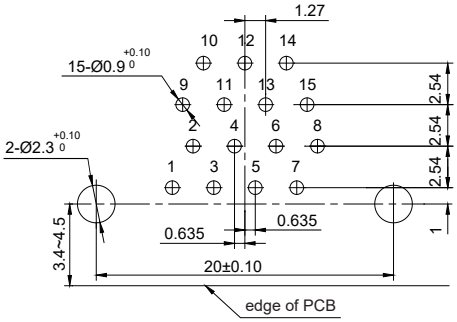

R04J-15RHF-Q8

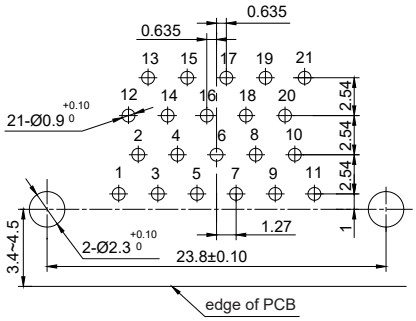

R04J-21RHF-Q8

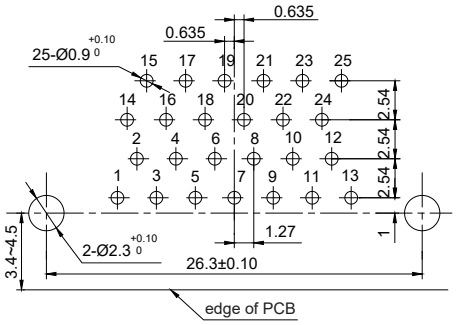

R04J-25RHF-Q8

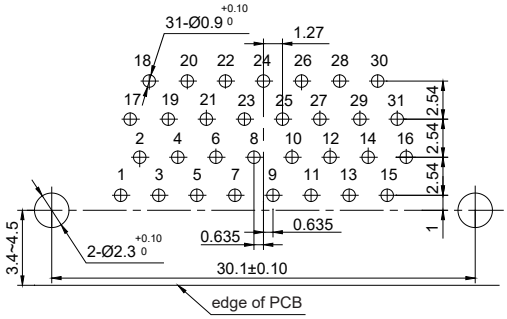

R04J-25RHF-Q8

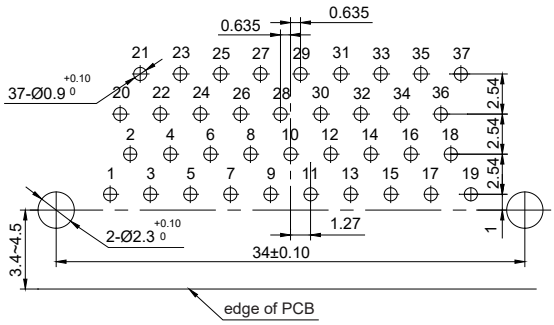

R04J-37RHF-Q8

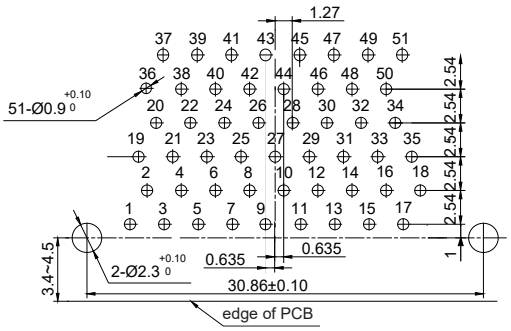

R04J-51RHF-Q8

Remark:All dimensions are in mm.

Sunkye International Co., Limited. Email: sales@sunkye.com Tel: 00852-69486797 Fax: 00852-31828508
Version Code 2021

R04JC Series Right Angle to PCB Connectors Type Q--PCB Layout

- Patterns Shown are for Connectors Mounting Side of PC Board
- PCB Layout: 2.54*2.54mm
- Receptacle Connectors: R04JC-9~51RHF-Q

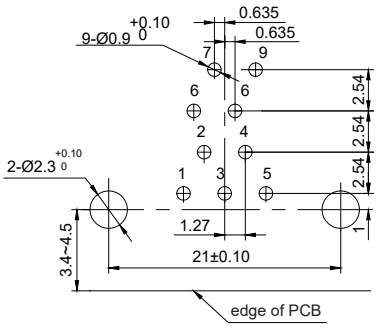

R04JC-9RHF-Q

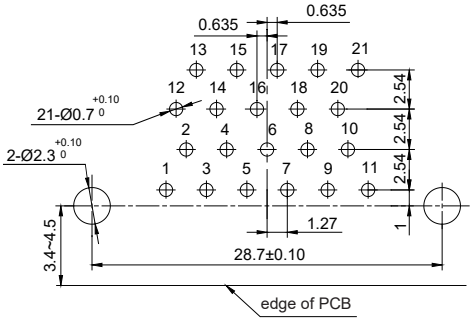

R04JC-21RHF-Q

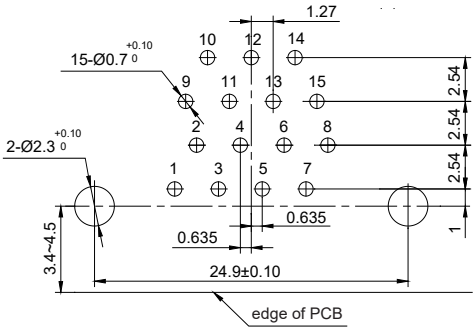

R04JC-15RHF-Q

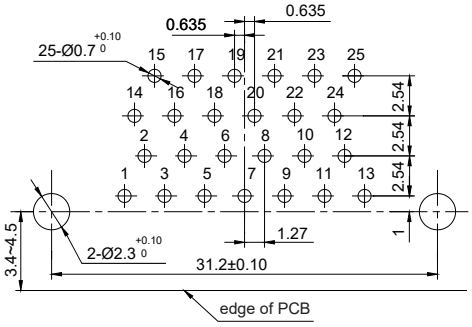

R04JC-25RHF-Q

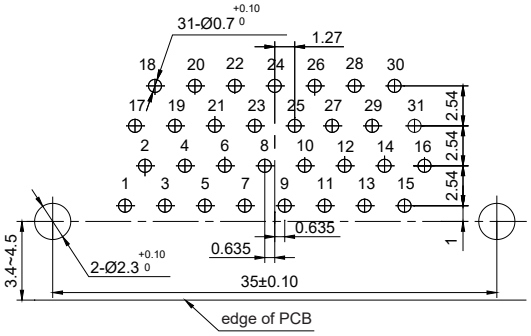

R04JC-31RHF-Q

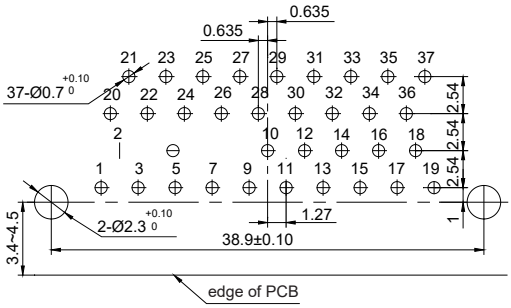

R04JC-37RHF-Q

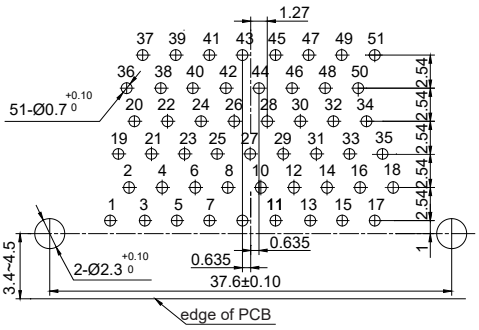

R04JC-51RHF-Q

Remark:All dimensions are in mm.

R04JA Series Right Angle to PCB Connectors Basic Type--PCB Layout

- Patterns Shown are for Connectors Mounting Side of PC Board
- PCB Layout: 2.54*2.54mm
- Receptacle Connectors: R04JA-9~51RHF

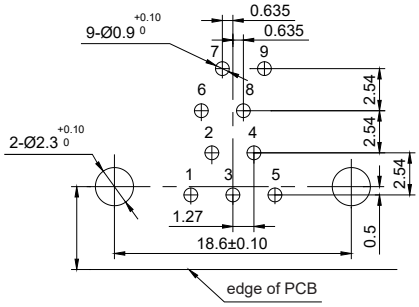

R04JA-9RHF

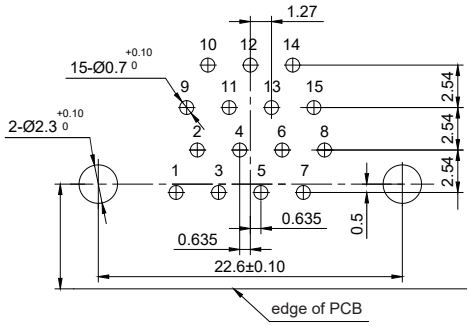

R04JA-15RHF

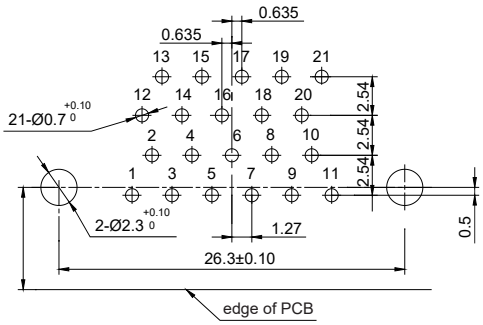

R04JA-21RHF

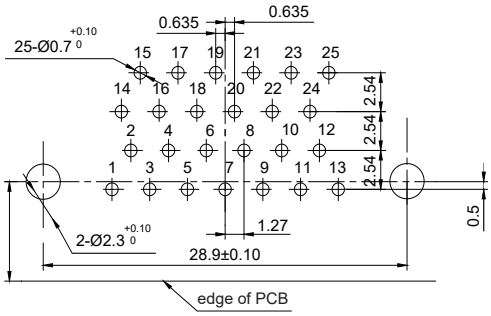

R04JA-25RHF

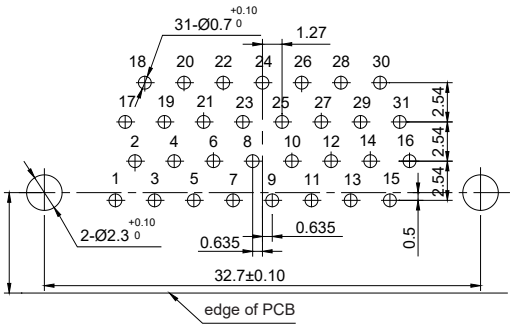

R04JA-31RHF

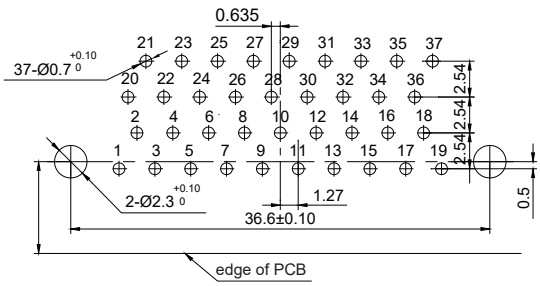

R04JA-37RHF

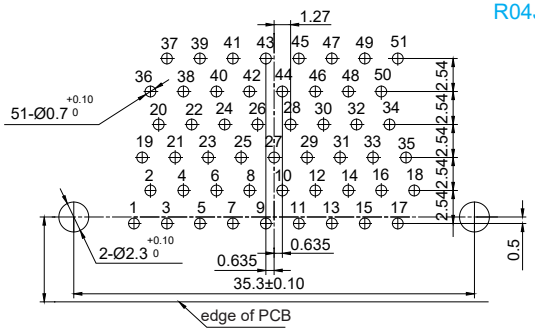

R04JA-51RHF

Remark:All dimensions are in mm.

Sunkye International Co., Limited. Email: sales@sunkye.com Tel: 00852-69486797 Fax: 00852-31828508
Version Code 2021

MIL-DTL-83513 Micro-D Connectors

R04J Series Solder Cup Connectors

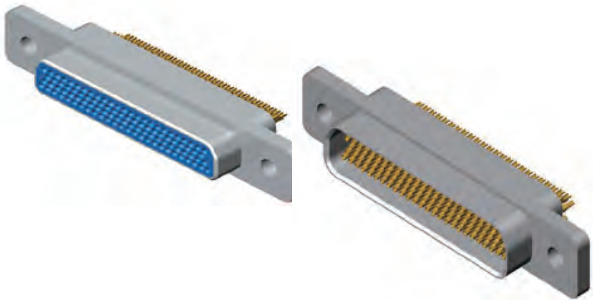

Brief Introduction

- Micro-D Connectors
- Twist Pin Contacts, High Density
- Metal Shell, Nickel or Cadmium Plating
- Solder Cup Connectors
- Meets MIL-DTL-83513

Specifications

■Environment Temperature:	-55℃~+125℃
■Vibration:	10Hz~2000Hz,196m/s²
■Random Vibration:	Power spectrum density 0.4G²/Hz root mean square value of total acceleration 23.1G
■Shock:	735m/s² 11sm
■Rated Current:	3A
■Contact Resistance:	≤10mΩ
■Insulation Resistance:	≥5000MΩ
■Dielectric Strength:	800V
■Durability:	500 times

Contact Arrangements

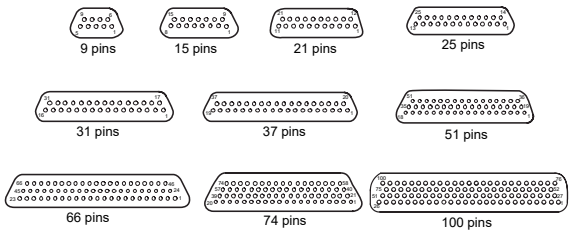

How To Order

Sample Part Number	R04J	-25	PI	J	W	G	A3

Series:
R04J—Standard Type
R04JS—Glue Sealing
R04JS1—Glass-Sintered Sealing (See page 51 to 52)

Contact Number:
9, 15, 21, 25, 31, 37, 51, 66, 74, 100pins

Contact Type :
PI—Pin in Plug RH—Socket in Receptacle

Tail Termination Type:
J—Solder Cup

Locking Hardware Type:
W—Locking Hardware (See page 47) No Code—No Locking Hardware

Shell Material and Finish :
G—Aluminum Shell, Cadmium Plating No Code—Aluminum Shell, Nickel Plating

Cable Clamp Type:
A3—Cable Clamp (See page 48) No Code—No Cable Clamp

Free End Locking Hardware For R04J Series Solder Cup Connectors

Type	A	B	Outline Dimensions	Assembly Picture	Matched with Locking Hardware
W	M2-6h	7.1	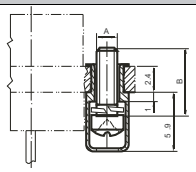	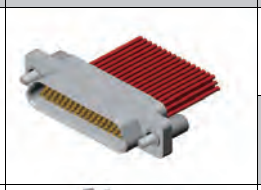	Q,Q0,Q2,Q3,Q4,Q5,Q7,Q8,Q9,Q10,Q11, Q14,Q15,Q17,Q23,Q25,Q29,Q32,Q35, Q36,Q37,Q41,Q42,Q43,Q45,Q46
W8	#2-56UNC-2A	7.1			Q1
W7	M2-6h	7.1	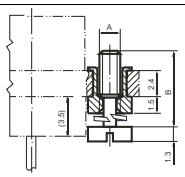	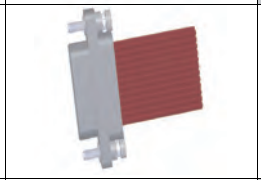	Q,Q0,Q2,Q3,Q4,Q5,Q7,Q8,Q9,Q10,Q11, Q14,Q15,Q17,Q23,Q25,Q29,Q32,Q35, Q36,Q37,Q41,Q42,Q43,Q45,Q46
N	M2-6h		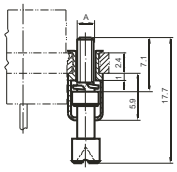	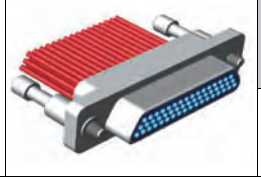	Q,Q0,Q2,Q3,Q4,Q5,Q7,Q8,Q9,Q10,Q11, Q14,Q15,Q17,Q23,Q25,Q29,Q32,Q35, Q36,Q37,Q41,Q42,Q43,Q45,Q46
N1	#2-56UNC-2A				Q1

Fixed End Locking Hardware For R04J Series Solder Cup Connectors

Type	A	B	C	Outline Dimensions	Assembly Picture	Matched with Locking Hardware	
Q	M2-6h	M2-6h	12.6	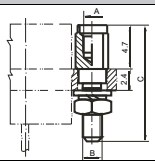	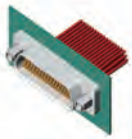	W, W7, W9, N	Note: Use with front panel mounting solder cup connectors
Q1	#2-56UNC-2B	#2-56UNC-2A	12.6			W8, N1	
Q8	M2-6h	M2-6h	15.6			W,W7,W9,N	
Q9	M2-6h	M2-6h	21.6			W,W7,N	
Q0	4.1	0.6	12.6	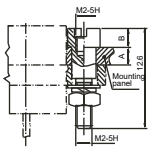	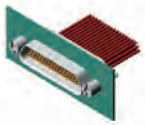	W, W7, W9, N Note: Use with rear panel mounting solder cup connectors	
Q3	3.3	1.4	12.6				
Q4	2.5	2.2	12.6				
Q11	1.3	3.4	12.6				
Q45	2.7	2	20				
Q29	M3-6h	10.5	3.3min	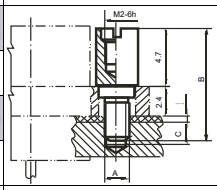	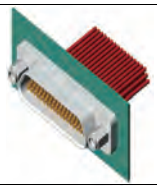	W,W7,W9,N Note:1. Use with front panel mounting solder cup connectors 2. For R04JS series	
Q36	M3-6h	14.7	6min				
Q37	M2-6h	10	2.8min				
Q43	M3-6h	11.7	4min				
Q44	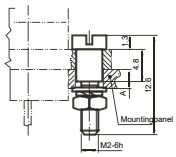 Front Panel Mounting			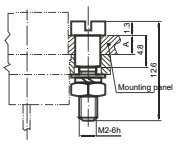 Rear Panel Mounting	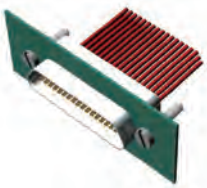	Note: 1. No need to lock with free end locking hardware 2. Front panel mounting, "A" dimension is 2.5~3.5mm 3. Rear panel mounting, (1)Mated with connectors without locking hardware, "A" dimension is 3.5mm max (2)Mated with connectors with fixed end locking hardware, "A" dimension is 4.9mm minus 1.3mm (The distance between bolt and flange of connector)	

Remark:1. Fixed end locking hardware apply to fix the connectors on the mounting panels or the PCB. Most fixed end locking hardware can be mated with free end locking hardware, but a little can not. (eg. Q44)
2. All dimensions are in mm.

Sunkye International Co., Limited. Email: sales@sunkye.com Tel: 00852-69486797 Fax: 00852-31828508
Version Code 2021

R04J Series A3 Cable Clamp

Stereogram

Only A3 Cable Clamp

Plug With A3 Cable Clamp

Outline Dimensions

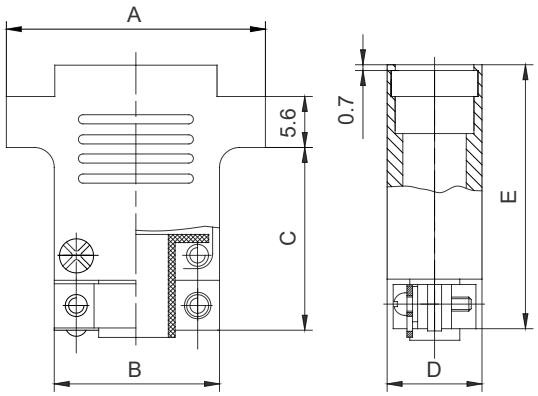

Pin Count	A	B	C	D	E
9	19.6	9.9	18.2	10.4	27
15	23.5	13.8	18.2	10.4	27
21	27.4	17.6	19.2	10.4	28
25	29.8	20.2	19.2	10.4	28
31	33.6	24	19.2	10.4	28
37	37.4	27.8	19.2	10.4	28
51	36.4	26.6	21.2	11.2	30
66	42.9	29.1	21.2	11.2	30
74	38.8	29.1	21.2	12	30
100	54.7	40.7	21.2	12	30

Outline Dimensions

Using Conditions

1.For R04J Solder Cup Basic Type
2.For R04J Crimp Basic Type

R04J Series Solder Cup Connectors - Basic Type

Plug:PIJ

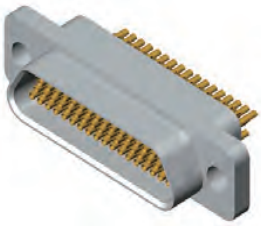

Receptacle:RHJ

- **Shell Plating:** Nickel or Cadmium
- **The Spacing of Arrangements of The Tail:** 1.27x1.1mm
- **Termination Type:** Solder Cup
- **Contacts:**
  R04J- 9, 15, 21, 25, 31, 37, 51, 66, 74, 100 PIJ/RHJ

R04J Series Solder Cup Basic Type Assembled With Cable Clamp

Look From Connecting End

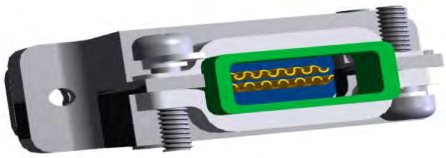

Look From The End of Cable Clamp

Remark:1.Example of R04J series solder cup connectors with A3 cable clamp.
2.All dimensions are in mm.

Outline Dimensions

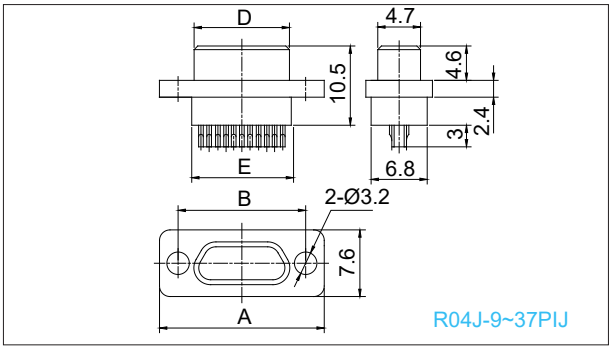

R04J-9~37PIJ

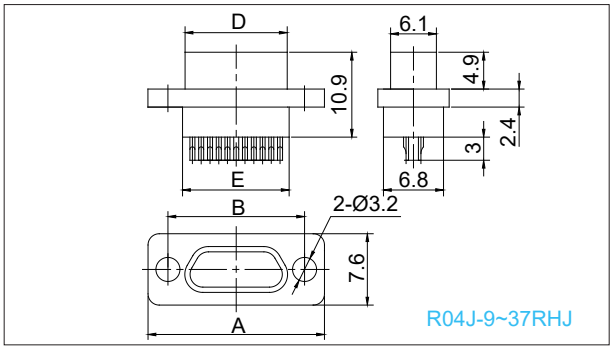

R04J-9~37RHJ

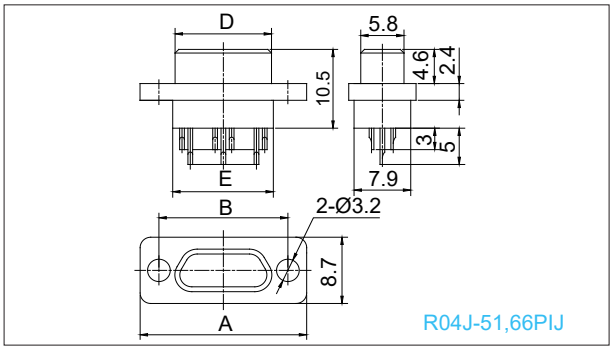

R04J-51,66PIJ

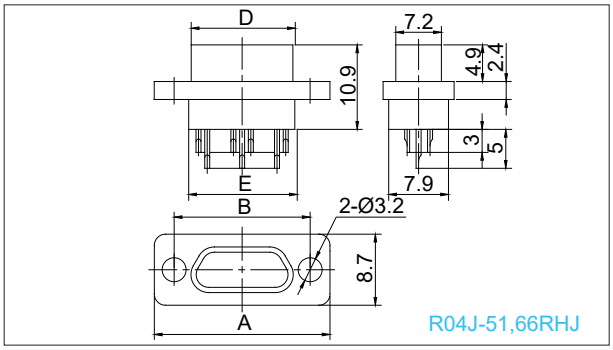

R04J-51,66RHJ

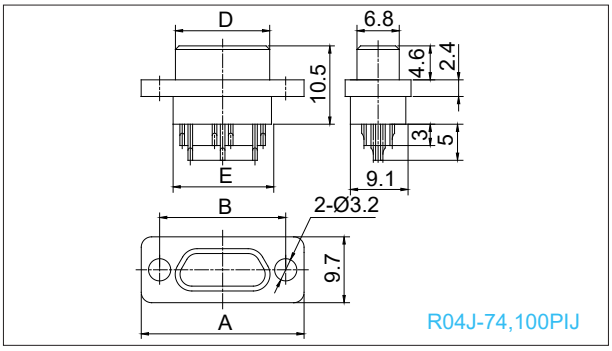

R04J-74,100PIJ

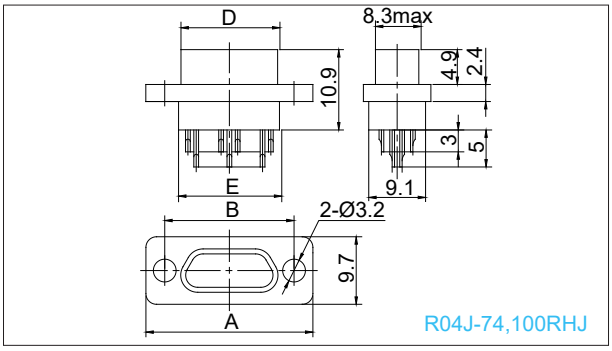

R04J-74,100RHJ

Part Number	A	B	D		E
			PIJ	RHJ	
R04J-9PIJ/RHJ	19.6	14.3	8.3	9.8	9.9
R04J-15PIJ/RHJ	23.5	18.2	12.3	13.7	13.8
R04J-21PIJ/RHJ	27.4	22	16	17.4	17.6
R04J-25PIJ/RHJ	29.8	24.5	18.6	20	20.2
R04J-31PIJ/RHJ	33.6	28.3	22.4	23.8	24
R04J-37PIJ/RHJ	37.4	32.2	26.3	27.7	27.8
R04J-51PIJ/RHJ	36.4	30.86	25	26.5	26.6
R04J-66PIJ/RHJ	42.9	37.3	31.4	32.9	33
R04J-74PIJ/RHJ	38.8	33.5	27.5	29	29.1
R04J-100PIJ/RHJ	54.7	45.7	35	36.6	36.3

Remark:All dimensions are in mm.

Sunkye International Co., Limited. Email: sales@sunkye.com Tel: 00852-69486797 Fax: 00852-31828508
Version Code 2021

Outline Dimensions After Mating (Without A3 Cable Clamp)

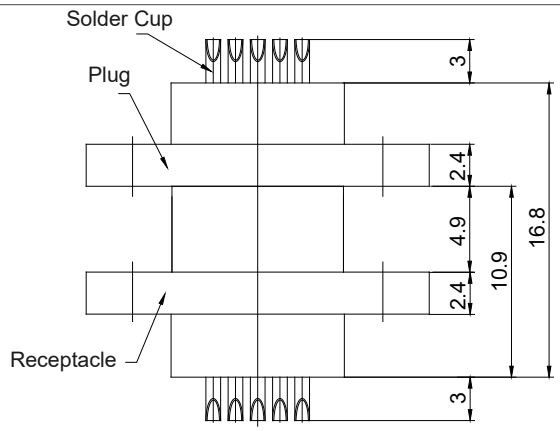

R04J-9~37pins

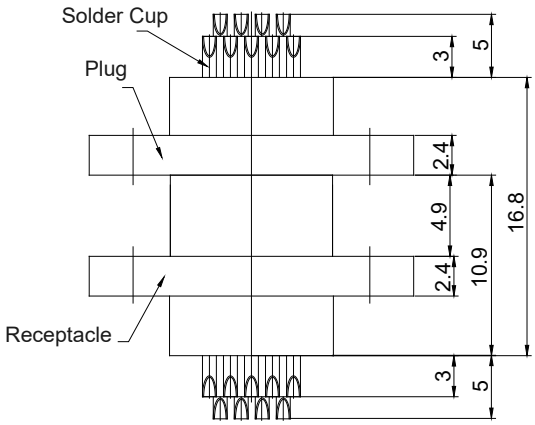

R04J-51~100pins

R04J Series Solder Cup Type - Glue Sealing Connectors

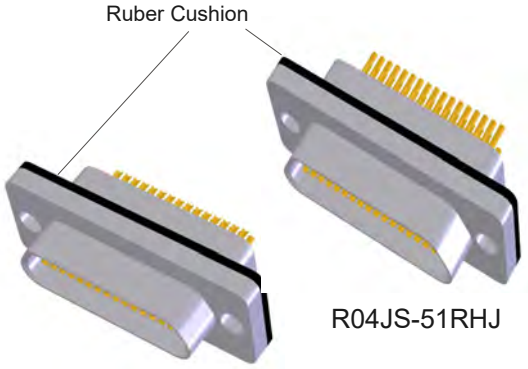

R04JS-51RHJ

R04JS-31RHJ

- **Shell Plating:** Nickel or Cadmium
- **The Spacing of Arrangements of The Tail:** 1.27x1.1mm
- **Termination Type:** Solder Cup
- **The Flange with A Rubber Cushion,Thickness:** 1mm
- **Glue Sealing Connectors (Receptacle Only)**
- **The Air Leakage Rate:** 5×10^{-2}Pa.CM^3/s
- **Insulation Resistance:** ≥2000MΩ
- **Contacts:** R04JS-31,51RHJ

Outline Dimensions

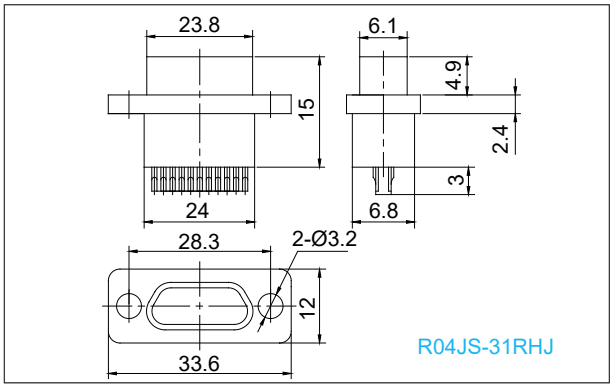

R04JS-31RHJ

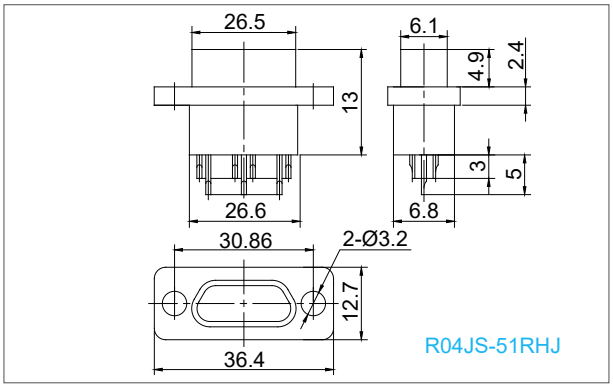

R04JS-51RHJ

Remark:All dimensions are in mm.

R04J Series Solder Cup Type - Glass-Sintered Sealing Connectors

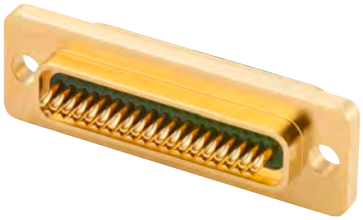

- **Shell:** Kovar Alloy Shell, Gold Plating
- **The Spacing of Arrangements of The Tail:** 1.27x1.1mm
- **Termination Type:** Solder Cup
- **The Flange with A Rubber Cushion,Thickness:** 1mm
- **Glass-Sintered Sealing Connectors (Receptacle Only)**
- **The Air Leakage Rate:** 1×10^{-3}Pa.CM^3/s
- **Insulation Resistance:** ≥5000MΩ
- **Contact Resistance:** ≤30mΩ
- **Dielectric Strength:** 600Vr.m.s
- **Contacts:** R04JS1-9, 15, 21, 25, 31, 37, 51RHJ
- **Other Performance is The Same as R04J Standard Type**

How To Order

Sample Part Number	R04JS1	-25	RH	J	Q29	K	-A3

Series:
R04JS1—Glass-Sintered Sealing(Receptacle Only)

Contact Number:
9, 15, 21, 25, 31, 37, 51pins

Contact Type :
RH—Socket in Receptacle

Tail Termination Type:
J—Solder Cup

Locking Hardware Type:
Q29, Q36, Q37,Q43 (See page 47) No Code—No Locking Hardware

Shell Material and Finish :
K—Kovar Alloy Shell, Gold Plating

Cable Clamp Type:
A3—Cable Clamp (See page 48) No Code—No Cable Clamp

Remark:This product is front panel mounting, we suggest using non-through threaded mounting hole.
Matching with locking hardware Q29, Q36, Q37,Q43. other mounting types need to be customized.

Sunkye International Co., Limited. Email: sales@sunkye.com Tel: 00852-69486797 Fax: 00852-31828508
Version Code 2021

Outline Dimensions

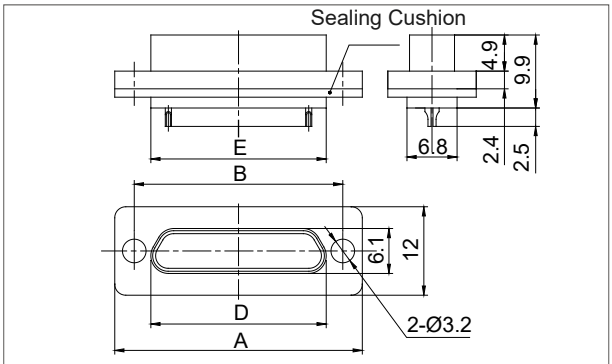

R04JS1-9~37RHJ

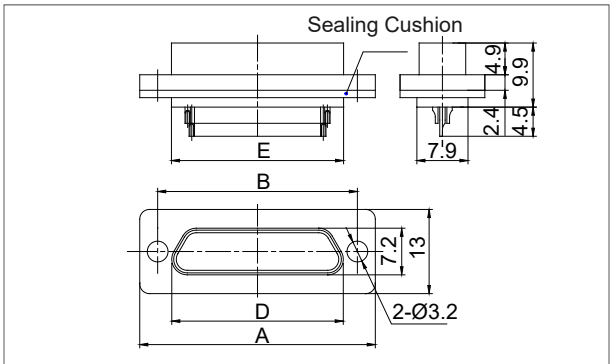

R04JS1-51RHJ

Part Number	A	B	D	E
R04JS1-9RHJ	19.6	14.3	9.8	9.7
R04JS1-15RHJ	23.5	18.2	13.7	13.6
R04JS1-21RHJ	27.4	22	17.4	17.4
R04JS1-25RHJ	29.8	24.5	20	20
R04JS1-31RHJ	33.6	28.3	23.8	23.8
R04JS1-37RHJ	37.4	32.2	27.7	27.6
R04JS1-51RHJ	36.4	30.86	26.5	26.4

Solder Cup Types (R04JS and R04JS1) - Mounting Hole Dimensions

■ **Suitable For Products:** R04JS-*RHJ and R04JS1-*RHJ

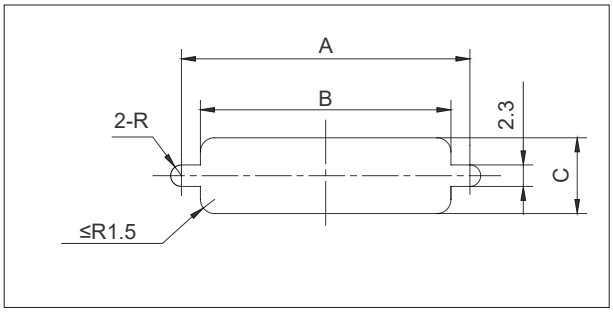

Mounting Hole Dimensions For Front Panel Mounting

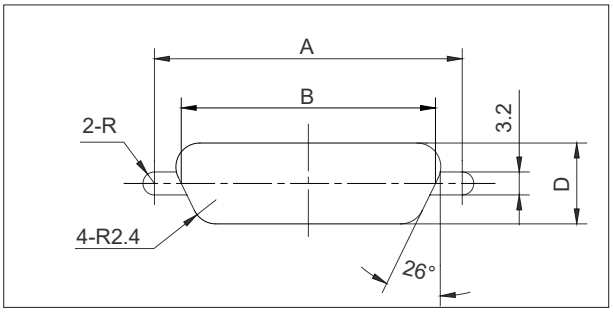

Mounting Hole Dimensions For Rear Panel Mounting

Contact Nos	A	B	C	D	Contact Nos	A	B	C	D
9 pins	14.3	10.2	7	6.3	37 pins	32.2	28.1	7	6.3
15 pins	18.2	14.1	7	6.3	51 pins	30.86	26.9	8.1	7.4
21 pins	22	17.9	7	6.3	66 pins	37.3	33.4	8.1	7.4
25 pins	24.5	20.5	7	6.3	74 pins	33.5	29.4	9.3	8.6
31 pins	28.3	24.3	7	6.3	100 pins	45.7	37	9.3	8.6

Remark: 1. R04JS and R04JS1 are both sealing products, we suggest using non-through threaded mounting hole for front panel mounting.

2. All dimensions are in mm.